FLORIDA MUNICIPAL SERVICES
c/o 17425 Gulf Blvd.
Redington Shores, FL 33708
(727) 202-6825

December 7, 2020

Meeting Date: December 8, 2020
Agenda Items 7.a., 7.b., 7.d., 7.e., 7.f.

MEMORANDUM

TO: Redington Beach Planning Board

FROM: Bruce Cooper, CBO, CFM, Building Official
R. Bruce McLaughlin, AICP, MCIP, Town Planner

SUBJECT: Agenda Introduction, December 8, 2020, Items 7.a., 7.b., 7.d., 7.e., 7.f.

On the December 8, 2020 Agenda are five [1] closely related items:

Ordinance 2020-02, Peril of Flood Comprehensive Plan Amendment
Ordinance 2020-12, new Site Plan Requirements
Ordinance 2020-14, amending the Stormwater Management Code
Ordinance 2020-03, creating a Standard Details Manual
Resolution 2020-13, establishing the framework for the establishment of the Stormwater Management Utility Fee

Given the passage of time since the Board last dealt with these and related issues, this Memo is respectfully provided as background to the agenda.

---

[1] The Notice of Public Hearing and the Agenda also include a rewrite of Code Chapter 10, the Floodplain Management Code. Further review revealed that no amendments to this Code Chapter were necessary to implement the ISR change or the Peril of Flood Comprehensive Plan Amendment. However, the Chapter rewrite is sill required. See staff report on Ordinance 2020-13.

Since at least the 1989 adoption of the Town's Comprehensive Plan mandated by the 1985 Growth Management Act, the maximum permitted impervious surface ratio (ISR) in the Town was 0.40. Notwithstanding this limit, irregular administration of the regulation and unpermitted work lead to an average ISR in the Town of 0.52.

In 2016, the then Building Official recommended that the ISR be increased to 0.65 to be more consistent with the permitted ISRs in the other Pinellas County beach communities. The Town attempted to implement the Building Official's recommendation through the adoption of Ordinance 2016-04. However, Ordinance 2016-04 was not adopted in accordance with State law and never took effect. [2]

In 2018 the Town initially decided to re-establish the 0.65 ISR it attempted to set by Ordinance 2016-04. Staff, (the Town Planner and the then Building Official Darin Cushing), initially recommended approval of what was identified as Ordinance 2018-08 which initially re-established the 0.65 ISR and re-enacted the emergency housing and mobility management policies of the companion ordinances attempted to be adopted in 2016.

However, as Messrs. Cushing and McLaughlin further examined the adverse impact of the higher ISR, they recommended deleting the ISR increase from Ordinance 2018-08. This Board, and subsequently, the Town Commission, agreed with the new staff recommendation and Ordinance 2018-08 was adopted dealing with only the emergency housing and mobility management issues.

Subsequently, as the Building Department continued to properly enforce the 0.40 ISR that had been in effect since at least 1989, public opposition arose along with a stated public desire to increase the permitted ISR to 0.65 to be more in keeping with that of the other Beach communities. The Town Board agreed, and with the ultimate endorsement of this Board, adopted Ordinance 2019-10, prepared by the Town Planner, Assistant Town Attorney Erica Augello, and the Town's special stormwater engineer, Lynn Townsend Burnett. Ordinance 2019-10 raised the permitted ISR to 0.65 but imposed the following requirements on new development:

> ... The land development regulations implementing this Policy shall:
>
> 1. reaffirm the Building Official's authority to enforce this Policy;

---

[2] Two other amendments dealing with emergency housing and mobility management were adopted at the same time and suffered from the same defects.

2. provide that the Building Official may confer with engineers and with professionals in other relevant fields to provide comprehensive review and approval of drainage plans and specifications for any project that increases the impervious surface ratio on the subject property.
3. The drainage design, construction and inspection requirements shall be consistent with the Town's land development regulations, and with the Pinellas County Stormwater Manual (February 1, 2017).
4. More generally, the goals of stormwater management are to minimize the adverse effects of urban development on communities, watersheds, water bodies, wetlands, floodplains and other natural systems. These goals should be applied to redevelopment situations so that existing stormwater conditions are appropriately improved with reconstruction. More specifically, these goals include:
   a. Reducing pollutant concentrations and loadings to a level to ensure that discharges do not cause or contribute to violations of State water quality standards.
   b. Preventing or reducing on-site and off-site flooding.
   c. Maintaining or restoring the hydrologic integrity of wetlands and aquatic habitats.
   d. Maintaining and promoting groundwater recharge.
   e. Promoting the reuse of rainfall and stormwater.
   f. Minimizing erosion and sedimentation.
   g.. Accounting for impacts to the project based on sea level rise projections.
5. The Town shall adopt, implement and maintain a Standard Details Manual to supplement the Pinellas County Stormwater Manual in order to provide guidance and criteria to the design and building community for best management practices unique to the Town's character.

In its Objections, Recommendations and Comments (ORC) report on Ordinance 2019-10, the Florida Department of Economic Development [3] noted that the Town's statutorily mandated comprehensive plan amendment on Peril of Flood (see staff report on Ordinance 2020-02) was

[3] Charged with reviewing and approving comprehensive plan amendments.

overdue. Since the increased ISR, at least without the mitigative measures required by the Ordinances under consideration at the Board's December 8, 2020, meeting, has the potential to further increase the peril of flood, the Ordinance amending the Comprehensive Plan with the Peril of Flood policies is properly considered as part of the general package of ordinances dealing with the ISR issue.

Finally, the Town is embarking on a number of pro-active tasks related to stormwater management, including seeking grants to assist in stormwater management. As the stormwater remedial work progresses, its relationship to both the increased ISR and to the Peril of Flood is obvious. One element of implementing the stormwater improvement program is a re-evaluation of the Stormwater Management Utility Fee which was last set in 2006.

Accordingly, this package of four Ordinances (2020-02, 2020-03, 2020-12 and 2020-14) and the companion Resolution 2020-13 (submitted now primarily to show how the amended Chapter 18.5 will establish the Stormwater Management Utility Fee), provide the mitigation techniques mandated by Ordinance 2019-10, address the State's objections to the proposed Peril of Flood policies, and show the framework for the Stormwater Management Utility Fee.

RBMcL/m
C:\Red Bch\Planning Board\2020-12-08\RB PB Agenda Intro 2020-12-08.wpd

AGENDA ITEM 7a.
Ordinance 2020-02

LTA ENGINEERS-LLC

Meeting Date December 8, 2020
Advertised Public Hearing
Agenda Item 7.a.

December 4, 2020

MEMORANDUM

TO: Town of Redington Beach Planning Board

FROM: Sarah Propst, AICP, PMP, LTA Engineers

SUBJECT: Proposed Ordinance 2020-02: Peril of Flood Comprehensive Plan Amendment:

EXECUTIVE SUMMARY

In 2015, the Florida Legislature adopted Chapter 2015-69, Laws of Florida, which requires every local government with a Comprehensive Plan Coastal Management Element to amend said Element which must now include policies related to the "Peril of Flood." Proposed Ordinance 2020-02 fulfills the statutory mandate in C. 2015-69. **STAFF RECOMMENDS THAT THE PLANNING BOARD FIND ORDINANCE 2020-02 INTERNALLY CONSISTENT WITH THE BALANCE OF THE TOWN'S COMPREHENSIVE PLAN AND RECOMMEND ITS APPROVAL TO THE TOWN BOARD.**

BACKGROUND

Applicant: Town of Redington Beach

Affected Area: Entire Town

THE ISSUE

To come into compliance with state law by inserting mandatory policies into the Town Comprehensive Plan's Conservation and Coastal Management Element (CCME) related to the "Peril of Flood."

HISTORY

In 2015, a local senator, Senator Brandes, introduced Senate Bill 1094 which had two components: mandating the inclusion of "Peril of Flood" policies in the CCME of the comprehensive plans of coastal communities, and amending legislation related to flood insurance, elevation certificates and related issues. The law is found as Appendix C, but the final legislative summary of the law bears reproduction here:

Section 1 amends s. 163.3178(2)(f), F.S., to require local governments when drafting their comprehensive coastal management plans to:

- Include development and redevelopment principles, strategies, and engineering solutions that reduce the flood risk in coastal areas which results from high-tide events, storm surge, flash floods, stormwater runoff, and the related impacts of sea-level rise.
- Encourage the use of best practices development and redevelopment principles, strategies, and engineering solutions that will result in the removal of coastal real property from flood zone designations established by the FEMA.
- Identify site development techniques and best practices that may reduce losses due to flooding and claims made under flood insurance policies issued in this state.
- Be consistent with, or more stringent than, the flood- resistant construction requirements in the Florida Building Code and applicable flood plain management regulations set forth in 44 C.F.R. part 60.
- Require construction activities seaward of the coastal construction control lines established pursuant to s. 161.053, F.S., be consistent with ch. 161, F.S.
- Encourage local governments to participate in the National Flood Insurance Program Community Rating System administered by the Federal Emergency Management Agency to achieve flood insurance premium discounts for their residents.

The Bill went through the normal legislative process, including reviews by the Senate Rules, Community Affairs, and Banking and Insurance Committees, and by the House. The Bill passed the House by a vote of 89 - 26 and passed the Senate unanimously. It was affirmatively approved by then Governor Scott on May 21, 2015.

NOTICE

The Clerk's office will advise as to the notice given of this advertised public hearing.

AUTHORITY

The Peril of Flood policies will take the form of a Comprehensive Plan Amendment (and perhaps an amendment to the Town's land development regulations).

The Planning Board, as the Town's Local Planning Agency, is charged with:

> Be[ing] the agency responsible for the preparation of the comprehensive plan or plan amendment and shall make recommendations to the governing body regarding the adoption or amendment of such plan.

Section 163.3174 (4)(a), F.S.

Town Code § 15.34 reiterates these powers and duties. Accordingly, the Planning Board has the authority to recommend to the Town Board both the form and substance of any

Comprehensive Plan Amendment dealing with the Peril of Flood issues mandated by Chapter 2015-69, Laws of Florida.

ANALYSIS

The previous version of the CCME, which was before this body and recommended for approval at the February 26, 2020 Planning Board Hearing, contained one additional goal, along with objectives and policies. The new, Goal 4 was provided to meet the six statutory requirements and provide the basis for implementation through the Town Standard Details Manual and Capital Improvement Projects initiated by the Town.

Council approved Ordinance 2020-02 on its first reading at the March 4, 2020 Council meeting. The ordinance was then transmitted to the Florida Department of Economic Opportunity for review. In August the Town received an Objections, Recommendations, and Comments (ORC) Report from the Department of Economic Opportunity. The ORC Report, attached as Exhibit B, includes two objections to the Comprehensive Plan update for Peril of Flood.

The CCME, attached as exhibit A, has been updated to address the objections. The original 2008 Comprehensive Plan goals, objectives and policies are in plain, black text. The language approved by Council on March 4, 2020 is shown as underlined, black text. The proposed modifications to address the ORC Report are included as red, underlined and strike-through text.

RECOMMENDATION

THAT THE PLANNING BOARD FIND PROPOSED ORDINANCE 2020-02 TO BE INTERNALLY CONSISTENT WITH THE BALANCE OF THE TOWN'S COMPREHENSIVE PLAN AND RECOMMEND TO THE TOWN BOARD APPROVAL OF THE ORDINANCE.

ATTACHMENTS:
EXHIBIT A – COMPLETE CCME WITH PROPOSED CHANGES
EXHBIT B – ORC REPORT FROM DEO
EXHIBIT C – CHAPTER 2015-69 LAWS OF FLORIDA
EXHIBIT D – ORDINANCE 2020-02 WITH CHANGES TO ADDRESS ORC

Exhibit A – CCME with Proposed Changes

THE FOLLOWING IS THE CURRENT COMPREHENSIVE PLAN LANGUAGE FOR CONSERVATION AND COASTAL MANAGEMENT ELEMENT AS ADOPTED IN 2008 WITH ADDITIONS AND DELETIONS DENOTED IN RED, STRIKE-THROUGH AND UNDERLINE:

3.6 CONSERVATION AND COASTAL MANAGEMENT ELEMENT (CCME)

Goal 1: To ensure the highest environmental quality possible, the Town of Redington Beach shall conserve, protect and appropriately manage its natural resources (aquatic, wetland, and terrestrial).

Objective 1.1 The Town shall protect the quality and quantity of surface and groundwater.

Policy 1.1.1 The Town shall implement an educational program for residential and commercial consumers to discourage waste and conserve water.

Policy 1.1.2 Recognizing the limitations of the potable water supply available to serve this community, the Town shall enforce water conservation ordinances which may be adopted by Pinellas County or the Southwest Florida Water Management District.

Policy 1.1.3 The Town shall enforce the required standards and regulations set forth in the Pinellas Aquatic Preserve Management Plan to protect and enhance the water quality of Boca Ciega Bay.

Policy 1.1.4 The Town shall protect water storage and water quality enhancement functions of wetlands and floodplain areas through acquisition, enforcement of laws and the application of land and water management practices which provide for compatible uses.

Policy 1.1.5 Promote the use of slow-release fertilizers within the town limits.

Policy 1.1.6 Incorporate best management practices such as bio-retention ponds and drought-and salttolerant landscaping consistent with Florida Friendly yards into the land development regulations.

Objective 1.2 The Town shall continue to strictly enforce regulations for development within the 100-year floodplain.

Policy 1.2.1 Recognizing that the community is located within the 100-year floodplain, the Town shall strictly enforce all appropriate flood regulations.

Policy 1.2.2 The Town shall protect the natural functions of the 100-year floodplain so that the floodcarrying and flood storage capacity are maintained.

Policy 1.2.3 The Town shall continue to enforce its floodplain ordinance.

Policy 1.2.4 The Town shall enforce land development regulations which recognize the limitations of development on a barrier island (e.g., 100-year floodplain, vulnerability to tropical storms, topography and soil conditions).

Objective 1.3 The Town shall conserve or improve wetlands, aquatic resources, and wildlife population and habitat to maintain their environmental and recreational value.

Policy 1.3.1 Natural areas such as mangroves and marshes shall be designated as Preservation on the Future Land Use and Transportation Map (Map 5).

Policy 1.3.2 All existing marine wetlands shall be identified as Preservation land as set forth on the Marine Resource Map (Map 4).

Policy 1.3.3 Projects (e.g., marinas, causeways, and dredging) which could inhibit tidal circulation shall include measures to maintain or improve tidal circulation and flushing.

Policy 1.3.4 The town's existing wetlands shall be conserved and protected from physical and hydrological alterations.

Policy 1.3.5 Marine wetlands, barrier island property containing numerous vegetative communities and/or shoreline locations with limited habitat diversity shall be considered priorities for environmental land acquisition.

Policy 1.3.6 Dredge and fill activities shall be conducted only when necessary, as determined after review and comment by the appropriate governmental agencies and interested citizens, and in a manner least harmful to the surrounding environment.

Objective 1.4 The Town shall conserve, appropriately use and protect native vegetation.

Policy 1.4.1 Require that all new development preserve, or relocate on site, a minimum of 25 percent of the native vegetation on site. This should not be interpreted to allow development in wetland areas.

Policy 1.4.2 Native vegetation shall receive priority in the landscaping requirements of land development regulations.

Policy 1.4.3 The Town, through the provision of public information, shall encourage shorelines lacking wetland vegetation to be planted with native vegetation in order to minimize potential flood damage, stabilize the shoreline, trap sediments and other non-point source pollutants, and provide additional habitat for fish and wildlife.

Policy 1.4.4 As part of the land development review process, require the removal of exotic species such as punk tree (Melalueca sp.), Australian pine (Casuarina sp.) and Brazilian pepper (Schinus sp.).

Policy 1.4.5 The Town shall consider soil conditions and vegetation classifications during site plan review.

Policy 1.4.6 Pilings, not fill, shall be used to elevate structures in native vegetation areas.

Policy 1.4.7 Although limited natural resources remain in the Town of Redington Beach, every effort shall be taken to protect these resources as follows: 1. Recreational development shall be compatible with the surrounding environment and shall be subject to performance standards adopted in land development regulations; 2. The clearing of trees and wetland vegetation shall be prohibited, unless specifically permitted; and 3. All applications for development approval shall be subject to site plan review.

Objective 1.5 Development activities shall ensure the protection of natural resources.

Policy 1.5.1 Unique and irreplaceable natural resources shall be protected from the adverse effects of development, except in cases of overriding public interest.

Policy 1.5.2 Species of flora and fauna listed in the Conservation and Coastal Management Element of this comprehensive plan as endangered, threatened or species of special concern, as defined by federal law or Florida Statutes, shall be protected through compliance with appropriate federal and state regulations.

Objective 1.6 The Town shall protect species with special status from adverse impacts due to loss of natural habitats.

Policy 1.6.1 The Town shall assist in the application of and compliance with all state and federal regulations pertaining to species of special status (e.g., endangered, rare, species of special concern and threatened) as required under the Florida Endangered and Threatened Species Act of 1977 and the federal Endangered Species Act of 1973.

Policy 1.6.2 Beach renourishment projects shall protect sea turtle nesting areas by limiting construction in such areas to winter and spring months, or by collecting eggs from the nests, incubating them, and releasing the hatchlings.

Policy 1.6.3 Continue providing public information regarding the protection of those sea turtle nesting areas located within the community.

Policy 1.6.4 Redington Beach shall continue to be designated as a bird sanctuary.

Objective 1.7 The Town shall continue to enforce the hazardous waste management procedures and applicable ordinances of Pinellas County and the Florida Department of Environmental Protection (FDEP).

Policy 1.7.1 The Town of Redington Beach, in conjunction with Pinellas County and the neighboring local governments, shall use regular bill mailings and public meetings to inform the town's residents of effective methods to safely store and dispose of household and commercial hazardous material and of procedures to follow in emergencies.

Policy 1.7.2 "Amnesty Days" and other methods will be used to encourage the collection and disposal of household and commercial hazardous material.

Policy 1.7.3 The Town shall coordinate with the FDEP, Tampa Bay Regional Planning Council and Pinellas County in developing an emergency response plan to handle accidents involving hazardous waste.

Policy 1.7.4 Regulate small generators of hazardous wastes to protect natural resources and public health.

Policy 1.7.5 Recycling of hazardous waste products such as oils, solvents and paints shall be promoted by the Town through the provision of public information.

Objective 1.8 The Town shall continue efforts to comply with all state and federal standards for air quality.

Policy 1.8.1 The Town shall work to reduce the potential for automobile emissions pollution by the following measures: 1. Require vegetative buffer strips between roadways and residential development; 2. Promote alternative transportation modes such as car pooling, pedestrian and bicycle paths; and 3. Coordinate with the MPO to maintain operation of roadways at acceptable levels of service.

Objective 1.9 The Town of Redington Beach shall coordinate with the State of Florida and other local jurisdictions in an effort to maintain the Outstanding Florida Waters designation on Boca Ciega Bay.

Policy 1.9.1 No new point sources shall be permitted to discharge from the Town of Redington Beach into Boca Ciega Bay or the Gulf of Mexico, or into ditches or canals that flow into the bay and gulf.

Policy 1.9.2 In order to reduce non-point source pollutant loadings, the Watershed Management Plan shall follow the regulations set out in the Florida Administrative Code.

Policy 1.9.3 In order to reduce non-point source pollutant loadings and improve the functioning of the town's drainage system, dumping of debris of any kind (e.g., yard clippings and trimmings), into drainage ditches, canals and stormwater control structures shall be prohibited.

Objective 1.10 The Town of Redington Beach shall protect and restore its beaches, dunes and natural system and establish construction standards which minimize the impacts of man-made structures on these systems.

Policy 1.10.1 ~~Construction~~ Development and redevelopment, seaward of the Coastal Construction Control line, established pursuant to s. 161.053, shall be consistent with chapter 161 of the Florida Statutes. ~~shall be subject to the permitting procedures pursuant to the Laws of Florida.~~

Policy 1.10.2 Ensure that coastal vegetative communities, coastal wildlife habitats, and dune systems are protected from the adverse effects of development.

Policy 1.10.3 Where existing waterways are not seawalled, native marine vegetation shall be used for shoreline stabilization where technically feasible.

Policy 1.10.4 The planting of native marine vegetation in front of the seawall to act as a natural buffer is encouraged.

Policy 1.10.5 A dune preservation zone shall be established by development regulations to protect the primary dunes, which shall address prohibitions on excavations, destruction of native vegetation, and activities which affect the natural fluctuation of the dunes.

Policy 1.10.6 The Town shall continue to provide adequate access to beaches and shorelines and adequate public transportation stops for beach and shoreline access.

Policy 1.10.7 The Town of Redington Beach shall develop a plan for maintaining and improving existing beach access. The plan shall include the following: 1. Maintain and improve sand dune cross-over structures and parking facilities; and 2. Provide access consistent with the standards included in the Recreation and Open Space Element.

Policy 1.10.8 The Town shall limit shoreline development that will adversely impact marine fisheries habitats.

Goal 2: The Town shall provide a set of guidelines for development that protect the lives and property of its residents from the effects of natural hazards.

Objective 2.1 The Town shall maintain or reduce hurricane clearance times.

Policy 2.1.1 The Town shall coordinate with state, regional and county agencies to ensure that major evacuation routes are adequately maintained and, when necessary, improved to facilitate an efficient and safe evacuation.

Policy 2.1.2 The Town, in cooperation with the Pinellas County Department of Emergency Management and the South Pinellas County Chapter of the American Red Cross and the other island communities, shall sponsor annual hurricane preparedness seminars to increase hurricane awareness.

Policy 2.1.3 Town emergency response personnel and volunteers shall coordinate with county and state emergency response agencies in emergency planning, including communications, traffic control, and warning operations, to effect a safe and efficient evacuation of the Town.

Objective 2.2 The Town shall reduce the risk of exposure of human life and public and private property to natural disasters through preparedness planning and implementation of hazard mitigation measures.

Policy 2.2.1 The Town, in coordination with the Pinellas County Department of Emergency Management, shall maintain and upgrade its hurricane evacuation plan which shall address the four phases of comprehensive emergency management: preparedness, response, recovery and mitigation.

Policy 2.2.2 Continue to oversee the development or revision of a hurricane plan; act as a liaison between state, regional, county and town emergency response and planning agencies; and ensure coordination between emergency management and development management activities in the town.

Policy 2.2.3 The Town Commission shall review all elements of the Pinellas County Local Mitigation Strategy to assure that hazard mitigation considerations are effective and implemented within its area of responsibility.

Goal 3: The Town shall expedite post-disaster recovery and reduce the future risk to human life and public and private property from natural hazards through recovery and redevelopment strategies.

Objective 3.1 The Town shall designate a Recovery Task Force to hear preliminary damage assessments and direct post-disaster recovery and redevelopment activities.

Policy 3.1.1 The Recovery Task Force shall consist of the Town Emergency Management Coordinator, the Building and Inspection Department and other members as appointed by the Board of Commissioners.

Policy 3.1.2 The Recovery Task Force shall fulfill the following responsibilities, as well as others deemed necessary: 1. Hear preliminary damage reports; 2. Take necessary steps to seek financial assistance from the appropriate state and federal agencies; 3. Authorize immediate clean-up and repairs necessary to protect the public health, safety and welfare; 4. Identify areas within the community where minor, moderate and major damage has occurred; 5. Recommend to the Board of Commissioners temporary building moratoria for building activities not essential to protect health, safety and welfare; 6. Recommend to the Board of Commissioners appropriate hazard mitigation policies which should be implemented in response to the disaster; and 7. Prepare a report evaluating post-disaster redevelopment response and make recommendations for necessary changes to this comprehensive plan.

Objective 3.2 Maintain a set of reconstruction permitting procedures.

Policy 3.2.1 Following a major hurricane event, the Board of Commissioners will adopt a temporary post-disaster building moratorium to allow sufficient time for immediate damage assessment, the identification of redevelopment opportunities, and hazard mitigation policy implementation.

Policy 3.2.2 The Town shall adopt a post-disaster procedure which will expedite permitting for minor repairs. The procedure shall include development plan review, engineering approval and building permitting and shall provide that all permitting is

coordinated with the appropriate agencies and consistent with the objectives of this comprehensive plan.

Objective 3.3 The Town shall address key reconstruction and redevelopment strategies which will be used to promote hazard mitigation.

Policy 3.3.1 Where financially feasible, property which has received recurring major hurricane damage (total devastation) from storm surge should be publicly acquired or designated preservation on the Future Land Use Map to prevent redevelopment of the property to its pre-hurricane land use.

Policy 3.3.2 The Town shall interrelate hazard and non-hazard mitigation goals during reconstruction decision-making including the following objectives: 1. Enhancement of local recreational and open space opportunities; 2. Enhancement of local beach access; 3. Enhancement and restoration of local natural ecosystems; 4. Reduction of traffic congestion, noise, and other transportation related problems; and 5. Enhancement of the long-term economic vitality of the local commercial base.

THE FOLLOWING IS THE RECOMMENDED GOAL, OBJECTIVES AND POLICIES FOR ADDRESSING PERIL OF FLOOD REQUIREMENTS. ADDITIONS SINCE THE LAST HEARING ARE DENOTED IN RED:

GOAL 4: Protect and enhance the Town's natural and built environment to avoid or withstand the effects of climate change, rising sea level, extreme high tides and storm surge to ensure net zero loss of buildable properties.

Objective 4.1: Increase the Town's resiliency to the impacts of climate change and rising sea levels by developing and implementing adaption strategies and measures in order to protect human life, natural systems and resources and public infrastructure, services, and public and private property.

Policy 4.1.1: Based on rising seas data as they evolve and associated vulnerabilities, to allow for flexible adjustments, preserve future strategic adaptation implementation options to maintain maximum resiliency in response to new risks and vulnerabilities; the Town will take advantage of new emerging data and technological opportunities. The Town's basis for measuring sea level rise shall be as per the Recommended Projection of Sea Level Rise in the Tampa Bay Region, as may be revised from time-to-time by the Tampa Bay Climate Science Advisory Panel.

Policy 4.1.2: The Town will identify public investments and infrastructure at risk to sea level rise and other climate related impacts. The Town will assess the vulnerability to public facilities and services, including but not limited to County water and waste water facilities, stormwater systems, roads, bridges, governmental buildings, transit infrastructure and other assets.

Evaluation Measure: Collaborating with regional partners, Town shall identify public investments, infrastructure, and assets at risk from rising sea levels by 2020. Thereafter, this assessment will be performed every five (5) years.

Policy 4.1.3: As per Section 163.3164(1) and Section 163.3177(6)(g)(10), Florida Statutes, an Adaptation Action Area (AAA) is an optional designation within the coastal management element of a local government's comprehensive plan which identifies one or more areas that experience coastal flooding due to extreme high tides and storm surge, and that are vulnerable to the related impacts of rising sea levels for the purpose of prioritizing funding for infrastructure and adaptation planning.

The entire Town is hereby designated as an AAA, as all areas meet considerations for AAA designation, which include the following:

a. Areas which experience tidal flooding, storm surge, or both;
b. Areas which have a hydrological connection to coastal waters;
c. Locations which are within areas designated as evacuation zones for storm surge; and
d. Other areas impacted by stormwater/flood control issues.

Policy 4.1.4: The Town will develop and implement adaptation strategies for areas vulnerable to coastal flooding, tidal events, storm surge, flash floods, stormwater runoff, salt water intrusion and other impacts related to climate change or exacerbated by sea level rise, with the intent to increase the community's adaptability and resiliency capacities.

The Town will include areas which experience tidal flooding, storm surge, or both as the priority for development and implementation of adaption strategies. Other areas will be included as the second priority for the development and implementation of adaptation strategies.

Policy 4.1.5: Adaptation strategies may apply to the following:

a. Public infrastructure planning, siting, construction, replacement, operation and maintenance;
b. Emergency management;
c. Stormwater management;
d. Land Development Regulations;
e. Building Codes;
f. Comprehensive Planning; and
g. Other functions

Policy 4.1.6: AAAs adaptation strategy options include:

a. Protection: Strategies that involve "hard" and "soft" structurally defensive measures to mitigate impacts of rising seas in order to decease vulnerability while allowing structures and infrastructure to

remain unaltered. Two examples are shoreline armoring and beach re-nourishment. Protection strategies may be targeted for areas of a community that are location-dependent and cannot be significantly altered or relocated, such as areas of historical significance, or water-dependent uses.

b. Accommodation: Strategies that do not act as a barrier, but rather alter the design through measures such as elevation or stormwater improvements, to allow the structure of infrastructure system to stay intact. Rather than preventing flooding or inundation, these strategies aim to reduce potential risks.

c. Management Strategies: Strategies that involve the actual removal of existing development, their possible relocation to other areas, and/or prevention of further development in high-risk areas.

d. Avoidance: Strategies that involve ensuring development does not take place in areas subject to coastal hazards associated with sea level rise or where the risk is low at present but will increase over time.

e. Environmental sustainability strategies.

f. Other options.

Policy 4.1.7: The Town shall pursue funding sources for the implementation of AAA adaptation strategies including the following:

a. Federal and State grants and technical expertise assistance (in-kind)

b. Local Stormwater Utility Fees and CIP (Capital Improvement Plan) prioritization

c. Prioritization/Private Partnerships

d. Pinellas County Local Mitigation Strategy (Hazard Mitigation Grant Program)

e. Other sources

Policy 4.1.8: The Town shall integrate AAAs into existing and future Town processes and Town-wide plans and documents which may include:

a. Strategic Plan;

b. Sustainability Plan;

c. Resiliency Plan;

d. Transportation Master Plan in conjunction with the ITPO (Island Transportation Planning Organization);

e. Stormwater Master Plan;

f. All Hazards Transportation Recovery Plan;

g. Land Development Regulations;

h. Capital Improvement Plan;

i. Local Mitigation Strategy;

j. Agreements with Public or Private Utility and Infrastructure Providers;

k. Agreements with Public Health Providers;

l. Interlocal Agreements with Other Government Agencies; and

m. Other processes, plans and documents.

Policy 4.1.9: The Town shall align and be consistent with, to the extent possible, relevant and current national, state, and regional adaptation strategy documents such as the Recommended Projection of Sea Level Rise in the Tampa Bay Region, UF/GEO Plan Center's Sea Level Scenario Sketch Planning Tool, and The President's Climate Action Plan as well as other regional strategic plans, disaster mitigation plans, water management plans, transportation/transit plans, and climate change plans.

Policy 4.1.10: The Town shall participate in, when appropriate, coordinated governmental, non-governmental and other appropriate agencies' proposed application requests for funding adaptation implementation projects.

Policy 4.1.11: The Town shall collaborate and coordinate with appropriate local, regional. State, and national governmental agencies, to the extent possible, toward the implementation of AAA adaptation strategies and to identify risks, vulnerabilities and opportunities associated with coastal hazards and the impacts from sea level rise.

Objective 4.2: The Town will encourage the use of best practices development and redevelopment principles, strategies, and engineering solutions that will result in the removal of coastal real property from flood zone designations established by the Federal Emergency Management Agency.

Policy 4.2.1: As procurement opportunities arise (such as though the use of grants or tax deed sales) the Town will consider acquiring for use as public open space, severe repetitive loss properties which have sustained repeated flood losses, thereby reducing potential losses due to flooding.

Policy 4.2.2: Continue site plan review for new construction with the requirement that the minimum first floor elevation for habitable space in residential and commercial buildings be at least at the Town of Redington Beach Freeboard, which is above the minimum FEMA requirement, to allow for maximum protection during flood conditions and from sea level rise.

Objective 4.3: The Town will identify site and development techniques and best practices that may reduce losses due to flooding and claims made under flood insurance policies issued in the State of Florida.

Policy 4.3.1 Maximize unpaved landscape to allow for more stormwater infiltration.

Policy 4.3.2 Encourage planting of vegetation that is highly water absorbent, can withstand the marine environment and the impacts of tropical storm winds, and incorporate provisions for the care and maintenance of trees and plants into the Town's Land Development Code.

Policy 4.3.3: The Town shall support development measures which integrate innovative climate adaptation and mitigation designs such as low impact development (LID) practices to better manage storm water runoff.

Policy 4.3.4 Incorporate stormwater storage and infiltration into all infrastructure replacement activities.

Policy 4.3.5 The Town will adopt a Town Standard Details Manual for guidance on approved means and methods of construction and redevelopment on private properties and within public rights of way. Manual will be adopted by Resolution and reviewed on a bi-annual basis with updates as needed.

Policy 4.3.6 The Town will implement a capital improvement program to install and maintain tide control valves on all Town owned and maintained outfall pipes.

Policy 4.3.7 The Town shall encourage private developments to adopt and implement a capital improvement program to install and maintain tide control valves on all privately owned and maintained outfall pipes.

Policy 4.3.8 The Town shall assess the natural shoreline areas vulnerable to sea level rise and adopt standard means and methods to protect and preserve the upland areas immediately adjacent to these areas in cooperation with FDEP, ACOE and SWFWMD.

Policy 4.3.9. The Town shall continue participating in the National Flood Insurance Program Community Rating System administered by the Federal Emergency Management Agency to achieve flood insurance premium discounts for residents.

Objective 4.4: The Town will be consistent with or more stringent than, the flood resistant construction requirements in the Florida Building Code and applicable flood plain management regulations set forth in 44 C.F.R. part 60.

Policy 4.4.1: The Town will review its Land Development Code and other related codes, and amend as necessary, to ensure will that the Town's development regulations applicable to development and redevelopment in the Town will consistent with, or more stringent than, the flood-resistant construction requirements in the Florida Building Code and applicable floodplain management regulations set forth in 44 C.F.R. part 60.

Exhibit B - ORC Report

Ron DeSantis
GOVERNOR

Ken Lawson
EXECUTIVE DIRECTOR

August 27, 2020

The Honorable James Simons
Mayor, Town of Redington Beach
Town Hall, 105 164 Avenue
Redington Beach, Florida 33708

Dear Mayor Simons:

The Department of Economic Opportunity ("Department") has completed its review of the proposed comprehensive plan amendment for the Town of Redington Beach (Amendment No. 20-02ER), which was received and determined complete on July 16, 2020. We have reviewed the proposed amendment in accordance with the state coordinated review process set forth in Sections 163.3184(2) and (4), Florida Statutes (F.S.), for compliance with Chapter 163, Part II, F.S.

The attached Objections, Recommendations, and Comments Report outlines our findings concerning the amendment. We have identified two objections and have included recommendations regarding measures that can be taken to address the objections. We are also providing a comment. The comment is offered to assist the local government but will not form the basis for a determination of whether the amendment, if adopted, is "In Compliance" as defined in Section 163.3184(1)(b), F.S. Copies of comments received by the Department from reviewing agencies, if any, are also enclosed.

The Town should act by choosing to adopt, adopt with changes, or not adopt the proposed amendment. For your assistance, we have enclosed the procedures for final adoption and transmittal of the comprehensive plan amendment. **The second public hearing,** which shall be a hearing on whether to adopt one or more comprehensive plan amendments, **must be held within 180 days** of your receipt of the Department's attached report, or the amendment will be **deemed withdrawn** unless extended by agreement with notice to the Department and any affected party that provided comment on the amendment pursuant to Section 163.3184(4)(e)1., F.S.

An equal opportunity employer/program. Auxiliary aids and service are available upon request to individuals with disabilities. All voice telephone numbers on this document may be reached by persons using TTY/TTD equipment via the Florida Relay Service at 711.

Department staff is available to assist the Town to address the objections and comment. If you have any questions related to this review, please contact Valerie James, Planning Analyst, by telephone at (850) 717-8493 or by email at valerie.james@deo.myflorida.com.

Sincerely,

James D. Stansbury, Chief
Bureau of Community Planning and Growth

JDS/vj

Enclosures: Objections, Recommendations, and Comments Report
Procedures for Adoption
Reviewing Agency Comments

cc: R. Bruce McLaughlin, AICP, MCIP, Town Planner, Town of Redington Beach
Sean T. Sullivan, Executive Director, Tampa Bay Regional Planning Council

Objections, Recommendations and Comments Report
Proposed Comprehensive Plan Amendment
Town of Redington Beach Amendment No. 20-02ER

The Department of Economic Opportunity has identified two objections and a comment regarding the Town of Redington Beach's proposed comprehensive plan amendment. The objections and comment are provided below, along with recommended actions the Town could take to resolve issues of concern. If the Town adopts the plan amendment without adequately addressing the objections, the Department may find the amendment not in compliance with Chapter 163, Part II, Florida Statutes (F.S.), pursuant to section 163.3184(4)(e)4., F.S. Comments are offered to assist the local government and will not form the basis for a compliance determination.

Department staff has discussed the basis of the report with local government staff and is available to assist the Town to address the objections and comment.

I. Objections:

Objection 1: Conservation and Coastal Management Element

Both the existing comprehensive plan and the proposed amendment fails to satisfy the requirements in sections 163.3178(2)(f)5. and 6., F.S., as indicated below. Section 163.3178(2), F.S., requires that the Coastal Management Element in the local government comprehensive plan include:

(f) A redevelopment component that outlines the principles that must be used to eliminate inappropriate and unsafe development in the coastal areas when opportunities arise. The component must:

5. Require that any construction activities seaward of the coastal construction control lines established pursuant to s. 161.053 be consistent with chapter 161.

DEO Objection: The existing Policy 1.10.1 states, "Construction seaward of the Coastal Construction Control Line shall be subject to the permitting procedures pursuant to the Laws of Florida." However, the policy only addresses the permitting procedures for Coastal Construction Control Lines in Chapter 161 and does not address the Chapter's other provisions. Therefore, both the existing comprehensive plan and the proposed amendment fail to satisfy the requirement in Section 163.3178(2)(f)5., F.S.

6. Encourage local governments to participate in the National Flood Insurance Program Community Rating System administered by the Federal Emergency Management Agency to achieve flood insurance premium discounts for their citizens.

DEO Objection: Both the existing comprehensive plan and proposed amendment do not encourage citizens to participate in the National Flood Insurance Program Community Rating System administered by the Federal Emergency Management Agency, as required by section 163.3178(2)(f)6, F.S.

Statutory Authority: Sections 163.3177(6)(g) and 163.3178(2)(f)5. and 6., Florida Statutes.

Recommendations:

Section 163.3178(2)(f)5., F.S., Recommendation: Modify existing Conservation and Coastal Element Policy 1.10.1 as follows:

> Policy 1.10.1 Redevelopment shall require that any construction activities seaward of the coastal construction control lines established pursuant to s. 161.053 shall be consistent with chapter 161. ~~shall be subject to the permitting procedures pursuant to the Laws of Florida.~~

Section 163.3177(2)(f)6., F.S., Recommendation: Amend the Conservation and Coastal Management Element to adopt a policy that states, "The Town shall seek to continue its participation in the National Flood Insurance Program Community Rating System administered by the Federal Emergency Management Agency to achieve flood insurance premium discounts for their residents."

II. Comment:

Comment 1: **Sea Level Rise Map**. The proposed amendment notes the Town's basis for measuring sea level rise will be per the Recommended Projection of Sea Level Rise in the Tampa Bay Region, as may be periodically revised by the Tampa Bay Climate Science Advisory Panel. This appears to be a great resource for this data and as such, the amendment should be strengthened by incorporating into the supporting data and analysis the current sea level rise map, projection scenario, and time horizon that was utilized in assessing sea level rise risk and in drafting the proposed amendment.

From:	Plan Review
To:	Eubanks, Ray; DCPexternalagencycomments
Cc:	Plan Review
Subject:	[EXTERNAL] - Redington Beach 20-02ER Proposed
Date:	Friday, August 14, 2020 3:36:14 PM
Attachments:	image002.png

To: Ray Eubanks, DEO Plan Review Administrator

Re: Redington Beach 20-02ER – State Coordinated Review of Proposed Comprehensive Plan Amendment

The Office of Intergovernmental Programs of the Florida Department of Environmental Protection (Department) has reviewed the above-referenced amendment package under the provisions of Chapter 163, Florida Statutes. The Department conducted a detailed review that focused on potential adverse impacts to important state resources and facilities, specifically: air and water pollution; wetlands and other surface waters of the state; federal and state-owned lands and interest in lands, including state parks, greenways and trails, conservation easements; solid waste; and water and wastewater treatment.

Based on our review of the submitted amendment package, the Department has found no provision that, if adopted, would result in adverse impacts to important state resources subject to the Department's jurisdiction.

Please submit all future amendments by email to plan.review@floridadep.gov. If your submittal is too large to send via email or if you need other assistance, contact Lindsay Weaver at (850) 717-9037.

Lindsay Weaver

Florida Department of Transportation

RON DESANTIS
GOVERNOR

11201 N. McKinley Drive
Tampa, Florida 33612

KEVIN J. THIBAULT P.E.
SECRETARY

July 17, 2020

Mr. Bruce McLaughlin, AICP, MCIP
Town Planner
18001 Gulf Boulevard
Redington Shores, FL 33708

Re: Redington Beach Comprehensive Plan Amendment 20-02ER

Dear Mr. McLaughlin:

Pursuant to Section 163.3184(3), Florida Statutes (F.S.), in its role as a reviewing agency as identified in Section 163.3184(1)(c), F.S., the Florida Department of Transportation (FDOT) reviewed proposed amendment 20-02ER.

Background: State Road 699 (Gulf Boulevard) extends through the barrier island Town of Redington Beach located between North Redington Beach and Madeira Beach. The Town (205 acres in size) is predominately residential, followed by preservation and recreation/open spaces uses. A significant increase in development and population is not anticipated. The 2010 population was 1,590 (Bureau of Economic and Business Research). SR 699 (Gulf Boulevard) runs through the town.

Proposal: The Town amended their 2008 Comprehensive Plan's Conservation and Coastal Management and Intergovernmental Coordination elements to incorporate Goals, Objectives and Policies related to mitigating the effects of Climate Change, Sea Level Rise Extreme High Tides, and Storm Surge in accordance with the Mandates set forth in Chapter 163, Florida Statutes, specifically Section 163.3178(f)(1)-(4).

Comment: FDOT determined proposed amendment 20-02ER has no impact on important state transportation resources or facilities within its jurisdiction.

- Also noted is the ORC (Objections, Recommendations and Comments) Report dated January 17, 2020 and prepared by the DEO Bureau of Community Planning and Growth suggesting the Town consider coordinating with the Tampa Bay Regional Planning Council in order to address the requirements in Section 163.3178(2)(f)1-6,F.S. Goals, objectives and policies that were

adopted by other local governments in the region and are available from the Department upon request.

Thank you for the opportunity to review this amendment. Please ensure that we receive a copy of the adopted version. Should you have any questions please do not hesitate to contact me at 813-975-6429 or at Daniel.santos@dot.state.fl.us.

Sincerely,

Daniel C. Santos, AICP
Transportation Planning Supervisor

cc: Ray Eubanks, Plan Processing Administrator, DEO
Waddah Farah, PDA Administrator, FDOT District 7
Lindsey Mineer, LGCP Coordinator, FDOT District 7

Southwest Florida
Water Management District

2379 Broad Street, Brooksville, Florida 34604-6899
(352) 796-7211 or 1-800-423-1476 (FL only)
WaterMatters.org

An Equal Opportunity Employer

Bartow Office
170 Century Boulevard
Bartow, Florida 33830-7700
(863) 534-1448 or
1-800-492-7862 (FL only)

Sarasota Office
78 Sarasota Center Boulevard
Sarasota, Florida 34240-9770
(941) 377-3722 or
1-800-320-3503 (FL only)

Tampa Office
7601 U.S. 301 North (Fort King Highway)
Tampa, Florida 33637-6759
(813) 985-7481 or
1-800-836-0797 (FL only)

Mark Taylor
Chair, Hernando, Marion
Michelle Williamson
Vice Chair, Hillsborough
Joel Schleicher
Secretary, Charlotte, Sarasota
Kelly S. Rice
Treasurer, Citrus, Lake, Levy, Sumter
Jack Bispham
Manatee
Roger Germann
Hillsborough
James G. Murphy
Polk
Rebecca Smith
Hillsborough, Pinellas
Seth Weightman
Pasco

Brian J. Armstrong, P.G.
Executive Director

August 11, 2020

Mr. R. Bruce McLaughlin, AICP, MCIP
Florida Municipal Services
18001 Gulf Boulevard
Redington Shores, FL 33708

Subject: **Redington Beach 20-2ER**

Dear Mr. McLaughlin:

The Southwest Florida Water Management District (District) has reviewed the proposed amendment. It does not appear that the proposed amendment will result in any adverse regional water resource-related impacts. Therefore, we are not forwarding any comments for consideration.

We appreciate this opportunity to participate in the review process. If you have any questions or require further assistance, please do not hesitate to contact me at (352) 796-7211, extension 4790, or james.golden@watermatters.org.

Sincerely,

James J. Golden, AICP
Senior Planner

JG
cc: Ray Eubanks, DEO

From: John Meyer
To: Anita Franklin; Buford Scott; DCPexternalagencycomments; Harris, Donna; Eubanks, Ray; Rogers, Scott; Spiers, Sherry A.; James, Valerie
Subject: [EXTERNAL] - LGCPA Summary Log for June/July 2020 - TBRPC
Date: Wednesday, July 22, 2020 4:01:46 PM
Attachments: CPA Log 081020 4FDEO.pdf

FDEO Personnel:

I have attached the Tampa Bay Regional Planning Council's *Local Government Comprehensive Plan Amendment* (LGCPA) *Summary Log* that has been prepared in conjunction with all LGCPAs received by our agency in the proposed phase during the months of June/July 2020. Please note that I am receptive to consideration of potential edit(s) if warranted and notified by the **COB on Friday, July 24, 2020**. This *Summary Log* will be provided as informational to members of the Tampa Bay Regional Planning Council in conjunction with their August 10, 2020 virtual meeting. Please ensure that your agency continues to reflect me as the contact person for TBRPC regarding all future LGCPAs to be submitted.

BASED ON A PRIOR CONVERSATION WITH MR. RAY EUBANKS, PLEASE NOTE THAT THE ATTACHED SUMMARY LOG MAY HAVE BEEN REVISED FROM ITS PRESENT FORM TO REFLECT ELIMINATION OF ANY/ALL SMALL-SCALE AMENDMENT(s) THAT MAY HAVE BEEN RECEIVED OVER THE TIME PERIOD SINCE THEY ARE EXEMPT FROM FDEO's REVIEW AND APPROVAL PROCESS. THEREFORE, TBRPC's NUMBERING SYSTEM MAY APPEAR NOT TO BE SEQUENTIAL.

I will continue to review all LGCPAs as expeditiously as possible but certainly within the allotted 30 day review period. You will be notified, in a timely manner, if a potential issue of inconsistency has been determined for your future LGCPA submittal(s). Otherwise, all LGCPAs will simply be documented within the Council's corresponding future Local Government Comprehensive Plan Amendment Summary Logs which will be provided to our Council members as informational in association with their respective meetings.

If you should have any question(s), please feel free to contact me. My contact

information is provided below. However, please note that our agency remains in a "work from home" mode for the time being. As such, I do prefer to be contacted via e-mail. Thank you.

John Meyer
Tampa Bay LEPC , LGCP, & DRI Coordinator
Tampa Bay Regional Planning
Pinellas Park, FL
http://www.tbrpc.org

TAMPA BAY

LOCAL GOVERNMENT COMPREHENSIVE PLAN AMENDMENT SUMMARY LOG - JUNE
(5/28/20 - 6/30/20)

TBRPC #	DATE RECD	JURISDICTION	SM. SCALE	LG. / TEXT	DEO #	LOCAL GOV'T REFERENCE #	TBRPC COMMENTS		TECH. ASSISTANCE COMMENTS		AMENDMENT DESCRIPTION
							Yes	No	Yes	No	
28	6/09	Tarpon Springs		✔	20-01ESR	App #20-28/ ORD. 2020-10		✔		✔	City proposes a CPAL* to modify the FLUM* of their Comprehensive Plan to change the land use associated with two parcels totaling 15.3± acres from RS* [Pinellas County] to RL* [Tarpon Springs]. The requested redesignation of land uses results from the voluntary annexation of the parcel into the City of Tarpon Springs. The parcels are located at 685 & 687 E. Klosterman Rd., situated at the northeast corner of the E. Klosterman Rd./S. Disston Ave. Intersection. Such redesignation would enable construction of a requested 51-unit Single-Family Residential development. Presently, two Single-Family residences exist on site, which would be demolished.
29	6/11	Tampa		✔	20-02 ESR	ORD. 19-18 A-G		✔		✔	City proposes FLUM modifications of their Comprehensive Plan to change the land uses associated with the following seven City Parks from a variety of (often RES* and/or MU*) uses to R/OS* and to eliminate any potential for future development beyond outdoor recreational uses on these parcels: A - AIDS Memorial Park, 0.71± acres, located at 102 W. Hyde Park Pl. B - Ballast Pt. Park, 6.77± acres, located at 5212 Interbay Blvd. C - Centennial Park, 1.43± acres, located at 1800 8th Ave. D - Cuscaden Park, 8.28± acres, located at 2800 N. 15th St. E - 22nd Street Park, 47.61± acres, located at 7801 N. 22nd St. F - Tappan Tracy Park, 57.05± acres, located at 6601 S. Sherrill Ave. G - Takomah Trail Park, 26.47± acres, located at 10099 Takomah Tr.

[illegible]	[illegible]	[illegible]	[illegible]	[illegible]	[illegible]	[illegible]	[illegible]		[illegible]		[illegible]
							Yes	No	Yes	No	
30	6/11	Tampa		✔	20-02 ESR	ORD. 19-21		✔		✔	City proposes to delete Policy NE 5.1.9 due to concern for potential interpretation that the City regulates "*unpopular uses.*" As currently written, it is stated as "*the City shall continue to support standards in land development regulations that address location and excessive concentration of locally unpopular land uses such as group hoes, landfills, jails, parole offices, work release facilities, power lines and public housing.*"
31	6/22	Inverness		✔	20-01ESR	ORD. 2020-753		✔		✔	Following the recent annexation of a parcel from Citrus County into the City of Inverness, the City proposes to modify the FLUM* of their Comprehensive Plan to change the land use associated with 382.42± acres from Agriculture/Agritourism to 343.19± acres of "Low Intensity Coastal Lakes" and 39.23± acres of General COM*. The purpose of the redesignation of land uses is to facilitate development [illegible] Lakeside Ranch, located on the east side of U.S. 41, just above Ea[illegible] Turner Camp Road in the City of Inverness.
34	6/29	Hillsborough		✔	TBD	RES. 20-48/ CPA 20-05		✔		✔	County proposes to modify the FLUM* of their Comprehensive Plan to change the land use associated with a 18.65± acres from Suburban MU*-6 to Heavy I*. The parcel is located southeast of the U.S. Highway 41/Kracker Ave. intersection in southern Hillsborough Co.
35	6/29	Hillsborough		✔	TBD	RES. 20-48/ CPA 19-08		✔		✔	County proposes to modify the FLUM* of their Comprehensive Plan to change the land use associated with a 15.94± acres from Suburban P/SP* to RES*-2. The parcel is located northwest of the Lithia Pinecrest/Browning Rd. intersection in eastern Hillsborough County.

LOCAL GOVERNMENT COMPREHENSIVE PLAN AMENDMENT SUMMARY LOG - JULY
(7/01/20 - 7/28/20)

TBR-PC #	DATE REC'D	JURISDICTION	SM. SCALE	LS / TEXT	DEO #	LOCAL GOV'T REFERENCE #	TBRPC COMMENTS		TECH. ASSISTANCE COMMENTS		AMENDMENT DESCRIPTION
							Yes	No	Yes	No	
36	7/07	Dade City		✔	20-01ESR	CPAL 2020-103/ ORD. 2020-04		✔		✔	Following prior annexation of parcels into the City, Dade City proposes to modify the FLUM* of their Comprehen-sive Plan to change the land use associated with 19 parcels (totaling 64.18± acres) from Pasco County I* Heavy and Dade City I* all to Dade City I*. The parcels are essentially located along U.S. 301 in an area commonly known as the *"Dade City Business Center."*
37	7/08	Citrus		✔	20-01ESR	CPA 20-06		✔		✔	County proposes a text amendment to the FLUE* of their Comprehensive Plan (i.e. Policy 17.7.3) to modify the utility requirements associated with new industrial development. This proposal would initially apply to 2.5 acres of a 6.21± acre site requesting a land use change to I*. The parcel is located at 2915 W. Dunnellon Rd, along the north side of S.R. 488, approximately one mile west of U.S. 41, southwest of the City of Dunnellon. The proposal is referred to as *"Nichols Lumber & Supply."*
38	7/17	Redington Beach		✔	20-01ESR	ORD. 2020-01		✔		✔	The Town proposes to modify the IE* of their Comprehensive Plan in order to comply with State Law by *"incorporating policies related to and adopting the Town's Ten Year Water Supply Facilities Work Plan."* As part of the Plan, a policy is established to reduce the Town's per capita Potable Water consumption rates from 120 gallons/day to 115 gallons/day.
39	7/17	Redington Beach		✔	20-02ESR	ORD. 2020-02		✔		✔	The Town proposes to modify the CME* & ICE* of their Comprehen-sive Plan in order to comply with State Law by incorporating policies pertaining to the Peril of Flood. In particular, these policies address *"mitigating the effects of climate change, sea level rise, extreme high tides and storm surge"* in accordance with Chapter 163, F.S.

A/R	Agricultural/Rural	EC	Employment Center	OHP	Harbor
ARP	Area Redevelopment Element	ED	Economic Development Element	P/SP	Public/Semi-Public
AL	Addison Village Profile	EHE	Future Land Use Element	PD	Planned Development
CBD	Central Business District	FLUM	Future Land Use Map	PF	Public Facilities Element
CCE	Cultural & Conservation Elements	GOPA	Goals, Objectives & Policies	PSFE	Public School Facilities Element
C	Conservation Element	H	Housing Element	OPC	Open Space/Conservation Element
CS	Community Element		Industrial	R/O	Residential/Office
CHHA	Coastal High Hazard Area	IC	Intergovernmental Coord. Element	R/OS	Recreation/Open Space
CE	Cultural Resources Element	IE	Intergovernmental Element	R/C/I	Residential/Office/Retail
CIP	Capital Improvements Plan/Program	I	Industrial Districts	RM	Residential
CME	Coastal Management Element	INS	Institutional	RL	Residential High
COM	Commercial	LCE	Public Communities Element	R	Residential Low
CON	Conservation	LDR	Land Development Code	RM	Residential Medium
CPA	Comprehensive Plan Amendment	L	Light Industrial	RS	Residential Suburban
CPAL	Comp. Plan Amendment/Large-Scale	MHUD	Mobile Planned Unit Development	RV	Residential Rural
CPAS	Comp. Plan Amendment/Small-Scale	MU	Mixed Use	TE	Transportation Element
DE	Drainage Element	NOI	Notice of Intent	U	Urban Fringe
EAR	Evaluation & Appraisal Report	O	Office		

CHAPTER 2015-69

Committee Substitute for Committee Substitute for Committee Substitute for Senate Bill No. 1094

An act relating to the peril of flood; amending s. 163.3178, F.S.; specifying requirements for the coastal management element required for a local government comprehensive plan; creating s. 472.0366, F.S.; defining terms; requiring a surveyor and mapper to submit a copy of each elevation certificate that he or she completes to the Division of Emergency Management within a specified period beginning on a specified date; authorizing the redaction of certain personal information from the copy; amending s. 627.715, F.S.; authorizing flexible flood insurance; specifying coverage requirements; deleting a provision that prohibits supplemental flood insurance from including excess coverage over any other insurance covering the peril of flood; revising the information that must be prominently noted on a certain page of a flood insurance policy; requiring the Office of Insurance Regulation to require an insurer to provide an appropriate credit or refund to affected insureds if the office determines that a rate of the insurer is excessive or unfairly discriminatory; revising the notice that must be provided to and acknowledged by an applicant for flood coverage from an authorized or surplus lines insurer if the applicant's property is receiving flood insurance under the National Flood Insurance Program; allowing an authorized insurer to request a certification from the office which indicates that a policy, contract, or endorsement issued by the insurer provides coverage for the peril of flood which equals or exceeds the flood coverage offered by the National Flood Insurance Program; specifying requirements for such certification; authorizing such insurer or its agent to reference or include the certification in specified advertising, communications, and documentation; providing that misrepresenting that a flood policy, contract, or endorsement is certified is an unfair or deceptive act; providing an effective date.

Be It Enacted by the Legislature of the State of Florida:

Section 1. Paragraph (f) of subsection (2) of section 163.3178, Florida Statutes, is amended to read:

163.3178 Coastal management.—

(2) Each coastal management element required by s. 163.3177(6)(g) shall be based on studies, surveys, and data; be consistent with coastal resource plans prepared and adopted pursuant to general or special law; and contain:

(f) A redevelopment component <u>that</u> ~~which~~ outlines the principles <u>that must</u> ~~which shall~~ be used to eliminate inappropriate and unsafe development in the coastal areas when opportunities arise. <u>The component must:</u>

1. Include development and redevelopment principles, strategies, and engineering solutions that reduce the flood risk in coastal areas which results from high-tide events, storm surge, flash floods, stormwater runoff, and the related impacts of sea-level rise.

2. Encourage the use of best practices development and redevelopment principles, strategies, and engineering solutions that will result in the removal of coastal real property from flood zone designations established by the Federal Emergency Management Agency.

3. Identify site development techniques and best practices that may reduce losses due to flooding and claims made under flood insurance policies issued in this state.

4. Be consistent with, or more stringent than, the flood-resistant construction requirements in the Florida Building Code and applicable flood plain management regulations set forth in 44 C.F.R. part 60.

5. Require that any construction activities seaward of the coastal construction control lines established pursuant to s. 161.053 be consistent with chapter 161.

6. Encourage local governments to participate in the National Flood Insurance Program Community Rating System administered by the Federal Emergency Management Agency to achieve flood insurance premium discounts for their residents.

Section 2. Section 472.0366, Florida Statutes, is created to read:

472.0366 Elevation certificates; requirements for surveyors and mappers.—

(1) As used in this section, the term:

(a) "Division" means the Division of Emergency Management established within the Executive Office of the Governor under s. 14.2016.

(b) "Elevation certificate" means the certificate used to demonstrate the elevation of property which has been developed by the Federal Emergency Management Agency pursuant to federal floodplain management regulation and which is completed by a surveyor and mapper.

(2) Beginning January 1, 2017, a surveyor and mapper shall, within 30 days after completion, submit to the division a copy of each elevation certificate that he or she completes. The copy must be unaltered, except that the surveyor and mapper may redact the name of the property owner.

Section 3. Section 627.715, Florida Statutes, is amended to read:

627.715 Flood insurance.—An authorized insurer may issue an insurance policy, contract, or endorsement providing personal lines residential

coverage for the peril of flood on any structure or the contents of personal property contained therein, subject to this section. This section does not apply to commercial lines residential or commercial lines nonresidential coverage for the peril of flood. This section also does not apply to coverage for the peril of flood that is excess coverage over any other insurance covering the peril of flood. An insurer may issue flood insurance policies, contracts, or endorsements on a standard, preferred, customized, or supplemental basis.

(1)(a)1. Standard flood insurance must cover only losses from the peril of flood, as defined in paragraph (b), equivalent to that provided under a standard flood insurance policy under the National Flood Insurance Program. Standard flood insurance issued under this section must provide the same coverage, including deductibles and adjustment of losses, as that provided under a standard flood insurance policy under the National Flood Insurance Program.

2. Preferred flood insurance must include the same coverage as standard flood insurance but:

a. Include, within the definition of "flood," losses from water intrusion originating from outside the structure that are not otherwise covered under the definition of "flood" provided in paragraph (b).

b. Include coverage for additional living expenses.

c. Require that any loss under personal property or contents coverage that is repaired or replaced be adjusted only on the basis of replacement costs up to the policy limits.

3. Customized flood insurance must include coverage that is broader than the coverage provided under standard flood insurance.

4. Flexible flood insurance must cover losses from the peril of flood, as defined in paragraph (b), and may also include coverage for losses from water intrusion originating from outside the structure which is not otherwise covered by the definition of flood. Flexible flood insurance must include one or more of the following provisions:

a. An agreement between the insurer and the insured that the flood coverage is in a specified amount, such as coverage that is limited to the total amount of each outstanding mortgage applicable to the covered property.

b. A requirement for a deductible in an amount authorized under s. 627.701, including a deductible in an amount authorized for hurricanes.

c. A requirement that flood loss to a dwelling be adjusted in accordance with s. 627.7011(3) or adjusted only on the basis of the actual cash value of the property.

d. A restriction limiting flood coverage to the principal building defined in the policy.

e. A provision including or excluding coverage for additional living expenses.

f. A provision excluding coverage for personal property or contents as to the peril of flood.

5.~~4.~~ Supplemental flood insurance may provide coverage designed to supplement a flood policy obtained from the National Flood Insurance Program or from an insurer issuing standard or preferred flood insurance pursuant to this section. Supplemental flood insurance may provide, but need not be limited to, coverage for jewelry, art, deductibles, and additional living expenses. ~~Supplemental flood insurance does not include coverage for the peril of flood that is excess coverage over any other insurance covering the peril of flood.~~

(b) "Flood" means a general and temporary condition of partial or complete inundation of two or more acres of normally dry land area or of two or more properties, at least one of which is the policyholder's property, from:

1. Overflow of inland or tidal waters;

2. Unusual and rapid accumulation or runoff of surface waters from any source;

3. Mudflow; or

4. Collapse or subsidence of land along the shore of a lake or similar body of water as a result of erosion or undermining caused by waves or currents of water exceeding anticipated cyclical levels that result in a flood as defined in this paragraph.

(2) ~~Any limitations on~~ Flood coverage deductibles and ~~or~~ policy limits pursuant to this section~~, including, but not limited to, deductibles,~~ must be prominently noted on the policy declarations page or face page.

(3)(a) An insurer may establish and use flood coverage rates in accordance with the rate standards provided in s. 627.062.

(b) For flood coverage rates filed with the office before October 1, 2019, the insurer may also establish and use such rates in accordance with the rates, rating schedules, or rating manuals filed by the insurer with the office which allow the insurer a reasonable rate of return on flood coverage written in this state. Flood coverage rates established pursuant to this paragraph are not subject to s. 627.062(2)(a) and (f). An insurer shall notify the office of any change to such rates within 30 days after the effective date of the change. The notice must include the name of the insurer and the average statewide percentage change in rates. Actuarial data with regard to such rates for flood coverage must be maintained by the insurer for 2 years after the effective date of such rate change and is subject to examination by the office. The office may require the insurer to incur the costs associated with an examination.

Upon examination, the office, in accordance with generally accepted and reasonable actuarial techniques, shall consider the rate factors in s. 627.062(2)(b), (c), and (d), and the standards in s. 627.062(2)(e), to determine if the rate is excessive, inadequate, or unfairly discriminatory. If the office determines that a rate is excessive or unfairly discriminatory, the office shall require the insurer to provide appropriate credit to affected insureds or an appropriate refund to affected insureds who no longer receive coverage from the insurer.

(4) A surplus lines agent may export a contract or endorsement providing flood coverage to an eligible surplus lines insurer without making a diligent effort to seek such coverage from three or more authorized insurers under s. 626.916(1)(a). This subsection expires July 1, 2017.

(5) In addition to any other applicable requirements, an insurer providing flood coverage in this state must:

(a) Notify the office at least 30 days before writing flood insurance in this state; and

(b) File a plan of operation and financial projections or revisions to such plan, as applicable, with the office.

(6) Citizens Property Insurance Corporation may not provide insurance for the peril of flood.

(7) The Florida Hurricane Catastrophe Fund may not provide reimbursement for losses proximately caused by the peril of flood, including losses that occur during a covered event as defined in s. 215.555(2)(b).

(8) An agent must, upon receiving ~~obtaining~~ an application for flood coverage from an authorized or surplus lines insurer for a property receiving flood insurance under the National Flood Insurance Program, ~~must~~ obtain an acknowledgment signed by the applicant before placing the coverage with the authorized or surplus lines insurer. The acknowledgment must notify the applicant that, if the applicant discontinues coverage under the National Flood Insurance Program which is provided at a subsidized rate, the full risk rate for flood insurance may apply to the property if the applicant ~~such insurance is~~ later seeks to reinstate coverage ~~obtained~~ under the ~~National Flood Insurance~~ program.

(9) With respect to the regulation of flood coverage written in this state by authorized insurers, this section supersedes any other provision in the Florida Insurance Code in the event of a conflict.

(10) If federal law or rule requires a certification by a state insurance regulatory official as a condition of qualifying for private flood insurance or disaster assistance, the Commissioner of Insurance Regulation may provide the certification, and such certification is not subject to review under chapter 120.

(11)(a) An authorized insurer offering flood insurance may request the office to certify that a policy, contract, or endorsement provides coverage for the peril of flood which equals or exceeds the flood coverage offered by the National Flood Insurance Program. To be eligible for certification, such policy, contract, or endorsement must contain a provision stating that it meets the private flood insurance requirements specified in 42 U.S.C. s. 4012a(b) and may not contain any provision that is not in compliance with 42 U.S.C. s. 4012a(b).

(b) The authorized insurer or its agent may reference or include a certification under paragraph (a) in advertising or communications with an agent, a lending institution, an insured, or a potential insured only for a policy, contract, or endorsement that is certified under this subsection. The authorized insurer may include a statement that notifies an insured of the certification on the declarations page or other policy documentation related to flood coverage certified under this subsection.

(c) An insurer or agent who knowingly misrepresents that a flood policy, contract, or endorsement is certified under this subsection commits an unfair or deceptive act under s. 626.9541.

Section 4. This act shall take effect July 1, 2015.

Approved by the Governor May 21, 2015.

Filed in Office Secretary of State May 21, 2015.

CODING: Words ~~stricken~~ are deletions; words underlined are additions.

ORDINANCE 2020-02

AN ORDINANCE OF THE TOWN OF REDINGTON BEACH, PINELLAS COUNTY, FLORIDA, AMENDING THE TOWN'S 2008 COMPREHENSIVE PLAN'S CONSERVATION AND COASTAL MANAGEMENT AND INTERGOVERNMENTAL COORDINATION ELEMENTS TO INCORPORATE GOALS, OBJECTIVES AND POLICIES RELATED TO MITIGATING THE EFFECTS OF CLIMATE CHANGE, SEA LEVEL RISE, EXTREME HIGH TIDES, AND STORM SURGE, IN ACCORDANCE WITH THE MANDATES SET FORTH IN CHAPTER 163, FLORIDA STATUTES, SPECIFICALLY SECTION 163.3178(f)(1)-(4), AND BASED ON UPDATED DATA AND ANALYSES; PROVIDING FOR SEVERABILITY; AND ESTABLISHING AN EFFECTIVE DATE.

WHEREAS, Section 163, Part II, Florida Statutes, establishes the requirements of the Community Planning Act and governs local government comprehensive planning and land development regulation; and

WHEREAS, The Town of Redington Beach adopted its Comprehensive Plan in October 1989, and has periodically revised and amended the Plan in order to ensure it remains current and responds to current needs and opportunities; and

WHEREAS, the Town Board of Commissioners desires to adopt development and redevelopment principles and strategies that reduce the risk of flooding from sea level rise, extreme high tides and storm surge, and

WHEREAS, the Town Board of Commissioners wishes to include a redevelopment component in its Coastal Management and Conservation Element of its Comprehensive Plan that specifically complies with Section 163.3178, F.S. and

WHEREAS, the Town has reviewed the proposed amendments to the Comprehensive Plan and said proposed amendments were reviewed by the Town's Local Planning Agency (LPA) at a duly advertised public hearing which determined such amendments to be consistent with the Comprehensive Plan; and

WHEREAS, the Town Board of Commissioners has agreed with the recommendations of the Local Planning Agency that the proposed amendments comply with the requirements of Chapter 163, Florida Statutes, and that the proposed amendments are consistent with the Comprehensive Plan; and

WHEREAS, The Building Official and Town Planner of the Town of Redington Beach recommended that the Comprehensive Plan be amended to include Goals, Objectives and Policies related to high tide events, storm surge, flash floods, stormwater runoff and sea-level rise; and

WHEREAS, the Board of Commissioners of the Town of Redington Beach desires to implement the recommendations of the Planning Board to adopt Comprehensive Plan policies related to the peril of flood.

NOW THEREFORE BE IT ORDAINED, by the Commissioners of the Town of Redington Beach, Florida, in its regular meeting duly assembled on this ___day of _____, 2020:

Section 1. Section 3.6 of the Town's Comprehensive Plan, the Conservation and Coastal Management Element, as adopted by Ordinance 08-12 amended by modification to Policy 1.10.1 and the insertion of Goal 4 and its implementing Objectives and Policies to read as follows:

CCME Policy 1.10.1
~~Construction~~ Development and redevelopment, seaward of the Coastal Construction Control Line, established pursuant to s. 161.053, shall be consistent with chapter 161 of the Florida Statutes. ~~shall be subject to the permitting procedures pursuant to the Laws of Florida.~~

CCME GOAL 4: **Protect and enhance the Town's natural and built environment to avoid or withstand the effects of climate change, rising sea level, extreme high tides and storm surge to ensure net zero loss of buildable properties.**

CCME Objective 4.1
Increase the Town's resiliency to the impacts of climate change and rising sea levels by developing and implementing adaption strategies and measures in order to protect human life, natural systems and resources and public infrastructure, services, and public and private property.

CCME Policy 4.1.1
Based on rising seas data as they evolve and associated vulnerabilities, to allow for flexible adjustments, preserve future strategic adaptation implementation options to maintain maximum resiliency in response to new risks and vulnerabilities; the Town will take advantage of new emerging data and technological opportunities. The Town's basis for measuring sea level rise shall be as per the Recommended Projection of Sea Level Rise in the Tampa Bay Region, as may be revised from time-to-time by the Tampa Bay Climate Science Advisory Panel.

CCME Policy 4.1.2
The Town will identify public investments and infrastructure at risk to sea level rise and other climate related impacts. The Town will assess the vulnerability to public facilities and services, including but not limited to County water and waste water facilities, stormwater systems, roads, bridges, governmental buildings, transit infrastructure and other assets.

Evaluation Measure: Collaborating with regional partners, Town shall identify public investments, infrastructure, and assets at risk from rising sea levels by 2020. Thereafter, this assessment will be performed every five (5) years.

CCME Policy 4.1.3

As per Section 163.3164(1) and Section 163.3177(6)(g)(10), Florida Statutes, an Adaptation Action Area (AAA) is an optional designation within the coastal management element of a local government's comprehensive plan which identifies one or more areas that experience coastal flooding due to extreme high tides and storm surge, and that are vulnerable to the related impacts of rising sea levels for the purpose of prioritizing funding for infrastructure and adaptation planning.

The entire Town is hereby designated as an AAA, as all areas meet considerations for AAA designation, which include the following:

a. Areas which experience tidal flooding, storm surge, or both;
b. Areas which have a hydrological connection to coastal waters;
c. Locations which are within areas designated as evacuation zones for storm surge; and
d. Other areas impacted by stormwater/flood control issues.

CCME Policy 4.1.4

The Town will develop and implement adaptation strategies for areas vulnerable to coastal flooding, tidal events, storm surge, flash floods, stormwater runoff, salt water intrusion and other impacts related to climate change or exacerbated by sea level rise, with the intent to increase the community's adaptability and resiliency capacities.

The Town will include areas which experience tidal flooding, storm surge, or both as the priority for development and implementation of adaption strategies. Other areas will be included as the second priority for the development and implementation of adaptation strategies.

CCME Policy 4.1.5

Adaptation strategies may apply to the following:

a. Public infrastructure planning, siting, construction, replacement, operation and maintenance;
b. Emergency management;
c. Stormwater management;
d. Land Development Regulations;
e. Building Codes;
f. Comprehensive Planning; and
g. Other functions

CCME Policy 4.1.6

AAAs adaptation strategy options include:

a. Protection: Strategies that involve "hard" and "soft" structurally defensive measures to mitigate impacts of rising seas in order to decease vulnerability while allowing structures and infrastructure to remain unaltered. Two examples are shoreline armoring and beach re-nourishment. Protection strategies may be targeted for areas of a community that are location-dependent and cannot be significantly altered or relocated, such as areas of historical significance, or water-dependent uses.

b. Accommodation: Strategies that do not act as a barrier, but rather alter the design through measures such as elevation or stormwater improvements, to allow the structure of infrastructure system to stay intact. Rather than preventing flooding or inundation, these strategies aim to reduce potential risks.

c. Management Strategies: Strategies that involve the actual removal of existing development, their possible relocation to other areas, and/or prevention of further development in high-risk areas.

d. Avoidance: Strategies that involve ensuring development does not take place in areas subject to coastal hazards associated with sea level rise or where the risk is low at present but will increase over time.

e. Environmental sustainability strategies.

f. Other options.

CCME Policy 4.1.7

The Town shall pursue funding sources for the implementation of AAA adaptation strategies including the following:

a. Federal and State grants and technical expertise assistance (in-kind)

b. Local Stormwater Utility Fees and CIP (Capital Improvement Plan) prioritization

c. Prioritization/Private Partnerships

d. Pinellas County Local Mitigation Strategy (Hazard Mitigation Grant Program)

e. Other sources

CCME Policy 4.1.8

The Town shall integrate AAAs into existing and future Town processes and Town-wide plans and documents which may include:

a. Strategic Plan;

b. Sustainability Plan;

c. Resiliency Plan;

d. Transportation Master Plan in conjunction with Forward Pinellas;

e. Stormwater Master Plan;

f. All Hazards Transportation Recovery Plan;

g. Land Development Regulations;

h. Capital Improvement Plan;

I. Local Mitigation Strategy;

j. Agreements with Public or Private Utility and Infrastructure Providers;

k. Agreements with Public Health Providers;

l. Interlocal Agreements with Other Government Agencies; and

m. Other processes, plans and documents.

CCME Policy 4.1.9
The Town shall align and be consistent with, to the extent possible, relevant and current national, state, and regional adaptation strategy documents such as the Recommended Projection of Sea Level Rise in the Tampa Bay Region, UF/GEO Plan Center's Sea Level Scenario Sketch Planning Tool, and The President's Climate Action Plan as well as other regional strategic plans, disaster mitigation plans, water management plans, transportation/transit plans, and climate change plans.

CCME Policy 4.1.10
The Town shall participate in, when appropriate, coordinated governmental, non-governmental and other appropriate agencies' proposed application requests for funding adaptation implementation projects.

CCME Policy 4.1.11
The Town shall collaborate and coordinate with appropriate local, regional, State, and national governmental agencies, to the extent possible, toward the implementation of AAA adaptation strategies and to identify risks, vulnerabilities and opportunities associated with coastal hazards and the impacts from sea level rise.

CCME Objective 4.2
The Town will encourage the use of best practices development and redevelopment principles, strategies, and engineering solutions that will result in the removal of coastal real property from flood zone designations established by the Federal Emergency Management Agency.

CCME Policy 4.2.1
As procurement opportunities arise (such as though the use of grants or tax deed sales) the Town will consider acquiring for use as public open space, severe repetitive loss properties which have sustained repeated flood losses, thereby reducing potential losses due to flooding.

CCME Policy 4.2.2
Continue site plan review for new construction with the requirement that the minimum first floor elevation for habitable space in residential and commercial buildings be at least at the Town of Redington Beach Freeboard, which is above the minimum FEMA requirement, to allow for maximum protection during flood conditions and from sea level rise.

CCME Objective 4.3
The Town will identify site and development techniques and best practices that may reduce losses due to flooding and claims made under flood insurance policies issued in the State of Florida.

CCME Policy 4.3.1
Maximize unpaved landscape to allow for more stormwater infiltration.

CCME Policy 4.3.2
Encourage planting of vegetation that is highly water absorbent, can withstand the marine environment and the impacts of tropical storm winds, and incorporate provisions for the care and maintenance of trees and plants into the Town's Land Development Code.

CCME Policy 4.3.3
The Town shall support development measures which integrate innovative climate adaptation and mitigation designs such as low impact development (LID) practices to better manage storm water runoff.

CCME Policy 4.3.4
Incorporate stormwater storage and infiltration into all infrastructure replacement activities.

CCME Policy 4.3.5
The Town will adopt a Town Standard Details Manual for guidance on approved means and methods of construction and redevelopment on private properties and within public rights of way. Manual will be adopted by Resolution and reviewed on a bi-annual basis with updates as needed.

CCME Policy 4.3.6
The Town will implement a capital improvement program to install and maintain tide control valves on all Town owned and maintained outfall pipes.

CCME Policy 4.3.7
The Town shall encourage private developments to adopt and implement a capital improvement program to install and maintain tide control valves on all privately owned and maintained outfall pipes.

CCME Policy 4.3.8
The Town shall assess the natural shoreline areas vulnerable to sea level rise and adopt standard means and methods to protect and preserve the upland areas immediately adjacent to these areas in cooperation with FDEP, ACOE and SWFWMD.

CCME Policy 4.3.9
The Town shall continue to participate in the National Flood Insurance Program Community Rating System administered by the Federal Emergency Management Agency to achieve flood insurance premium discounts for residents.

CCME Objective 4.4
The Town will be consistent with or more stringent than, the flood resistant construction

requirements in the Florida Building Code and applicable flood plain management regulations set forth in 44 C.F.R. part 60.

CCME Policy 4.4.1
The Town will review its Land Development Code and other related codes, and amend as necessary, to ensure will that the Town's development regulations applicable to development and redevelopment in the Town will consistent with, or more stringent than, the flood-resistant construction requirements in the Florida Building Code and applicable floodplain management regulations set forth in 44 C.F.R. part 60.

Section 2. The portions of the Town's Comprehensive Plan lawfully adopted and not expressly altered by this Ordinance remain in full force and effect.

Section 3. If any section, subsection, sentence, clause, provision or word of this Ordinance is held unconstitutional or otherwise legally invalid, same shall be severable and the remainder of this Ordinance shall not be affected by such invalidity, such that any remainder of the Ordinance shall withstand any severed provision, as the Board of Commissioners would have adopted the Ordinance and its regulatory scheme even absent the invalid part.

Section 4. The effective date of this Ordinance, if the plan amendment adopted hereby is not timely challenged, shall be the date the state land planning agency posts a notice of intent determining that this amendment is in compliance. If the amendment is timely challenged, or if the state land planning agency issues a notice of intent determining that this amendment is not in compliance, this amendment shall become effective on the date the state land planning agency or the Administration Commission enters a final order determining this adopted amendment to be in compliance. No development orders, development permits, or development dependent on this amendment may be issued or commence before it has become effective.

PASSED AND ADOPTED by the Board of Commissioners of the Town of Redington Beach, Pinellas County, Florida, on this _____ day of _____, 2020.

ATTEST:

_____ _____

Missy Clarke, CMC Town Clerk **Nick Simons, Mayor**

	Motion	Seconded	Aye	Nay	Absent
Vice-Mayor Kornijtschuk					
Commissioner Dorgan					
Commissioner Steiermann					
Commissioner Will					
Mayor Simons					

AGENDA ITEM 7b.
Ordinance 2020-12

FLORIDA MUNICIPAL SERVICES
c/o 17425 Gulf Blvd.
Redington Shores, FL 33708
(727) 202-6825

December 7, 2020

Meeting Date: December 8, 2020
Agenda Item 7.b.
Advertised Public Hearing

MEMORANDUM

TO: Redington Beach Planning Board

FROM: Bruce Cooper, CBO, CFM, Building Official
R. Bruce McLaughlin, AICP, MCIP, Town Planner

SUBJECT: Proposed Ordinance 2020-12, Site Plan Requirements

EXECUTIVE SUMMARY

Ordinance 2019-10 imposes certain mitigative stormwater techniques on site development proposals. These techniques are applied in part through the site plan approval process. The current site plan regulations also required rewriting to remove archaic and onerous requirements and to clarify and add certain requirements with respect to stormwater management, landscaping and traffic circulation. Ordinance 2020-12 implements and is consistent with Ordinance 2019-10 and resolves numerous problems in the current code. **STAFF RECOMMENDS THAT THE BOARD FIND ORDINANCE 2020-12 CONSISTENT WITH THE COMPREHENSIVE PLAN AND RECOMMEND ITS APPROVAL.**

BACKGROUND

Applicant	Town of Redington Beach
Affected Area	Entire Town

THE REQUEST

That the Planning Board review proposed Ordinance 2020-12, find the Ordinance consistent with the Town's Comprehensive Plan and recommend it to the Town Board for approval.

NOTICE

The Clerk's office will advise as to the notice given of this advertised public hearing.

AUTHORITY

Pursuant to §§ 4 and 5 of the Town Charter, the Town is governed by the Board of Commissioners which may exercise all powers available to a municipality under the Constitution and laws of the State of Florida. Those powers include preparing and adopting (via § 15-56 of the Town Code), a comprehensive plan for the Town and related land development and other, related, regulations.

The proposed amendment to the Town's Building Code is an amendment to a land development regulation as defined by § 163.3164(26), F.S. Accordingly, § 163.3174(2)(c) and Town Code § 15-34 require this Board to review the subject ordinance and make a determination of its consistency with the Town's Comprehensive Plan. The Board should also make a recommendation as to the adoption of Ordinance 2020-12.

ANALYSIS

Article III, Division 3 of Chapter 6 of the Town Code is problematic in several respects. For one thing, it requires a site plan whenever a building permit is issued, regardless of whether that permit entails any exterior work. It also theoretically requires the same level of detail for a window replacement as would be required for a newly constructed house. That is obviously inappropriate and is remedied by the adoption of Ordinance 2020-12.

The Ordinance establishes a statement of intent for the site plan process, defines "development," and defines "site plans" and "site sketches." The last is a new concept for the Town Code.

Staff wish to still be able to require a full site plan, prepared by an engineer, and with the level of detail to properly evaluate a major project. At the same time, staff acknowledge that smaller projects often need not be supported by a full site plan.

Accordingly, the Ordinance introduces the concept of a site sketch to be submitted with smaller projects. The Ordinance calls out the required contents of a site plan or site sketch and includes for both documents:

> All information reasonably required by the Building Code Administrator to determine compliance with the regulations governing the proposed development.

This is not an arbitrary provision allowing the Building Official to demand items be shown on the site plan or site sketch at will. Rather, the code provisions for various types of development: swimming pools, fences, seawalls, docks, etc., spell out the information needed to support each type of application.

More importantly, the Ordinance permits the Building Official to waive the requirement for any particular item required to be on a site plan or site sketch.

COMPREHENSIVE PLAN CONSISTENCY

First, Ordinance 2020-12 implements the mandate of the Comprehensive Plan Amendment adopted by Ordinance 2019-10:

> .. The land development regulations implementing this Policy shall:
>
> 1. reaffirm the Building Official's authority to enforce this Policy;
> 2. provide that the Building Official may confer with engineers and with professionals in other relevant fields to provide comprehensive review and approval of drainage plans and specifications for any project that increases the impervious surface ratio on the subject property.
> 3. The drainage design, construction and inspection requirements shall be consistent with the Town's land development regulations, and with the Pinellas County Stormwater Manual (February 1, 2017).

4. More generally, the goals of stormwater management are to minimize the adverse effects of urban development on communities, watersheds, water bodies, wetlands, floodplains and other natural systems. These goals should be applied to redevelopment situations so that existing stormwater conditions are appropriately improved with reconstruction. More specifically, these goals include:
   a. Reducing pollutant concentrations and loadings to a level to ensure that discharges do not cause or contribute to violations of State water quality standards.
   b. Preventing or reducing on-site and off-site flooding.
   c. Maintaining or restoring the hydrologic integrity of wetlands and aquatic habitats.
   d. Maintaining and promoting groundwater recharge.
   e. Promoting the reuse of rainfall and stormwater.
   f. Minimizing erosion and sedimentation.
   g.. Accounting for impacts to the project based on sea level rise projections.
5. The Town shall adopt, implement and maintain a Standard Details Manual to supplement the Pinellas County Stormwater Manual in order to provide guidance and criteria to the design and building community for best management practices unique to the Town's character.

The Ordinance is also consistent with and implements the following Comprehensive Plan Policies:

[FLU] Policy 1.1.2
Residential areas shall be located and designed to protect life and property from natural and manmade hazards such as flooding, excessive traffic, subsidence, noxious odors, and noise.

[FLU] Policy 1.1.4
The Town shall continue to implement performance standards, such as buffering and open space requirements, within the land development regulations, as appropriate.

[FLU] Objective 1.5
All development orders and permits for development and redevelopment activities shall be issued only if the public facilities necessary to meet the level-of-service standards as adopted pursuant to this comprehensive plan, are available concurrent with the impacts of the development.

[FLU] Policy 2.3.1
The Town of Redington Beach, acknowledging its particular vulnerability to coastal hazards as a barrier island community, recognizes the entire town as within the Coastal Storm Area ...

[FLU] Policy 3.1.3
All applications for development approval shall be subject to site plan review.

[FLU] Policy 3.1.4
The land development regulations shall contain specific and detailed provisions required to implement this comprehensive plan, which, at a minimum:
...
7. Provide for drainage and stormwater management, based on the minimum criteria established by the Southwest Florida Water Management District, the Town of Redington Beach or other appropriate governmental agencies;
8. Provide requirements for the provision of open space, and safe and convenient on-site traffic flow and parking requirements;
9. Encourage the use of native vegetation in the landscaping of multi-family and commercial developments; and
10. Provide provisions for the control of erosion and runoff from construction sites.

IE Policy 1.2.4
The Town shall continue to promote the use of native and drought-tolerant landscaping as a means of conserving water.

IE Goal 2:
To endeavor to provide an efficient drainage system which protects

human life, minimizes property damage, and improves stormwater quality and on-site retention.

IE Objective 2.1
The Town shall seek to improve the stormwater drainage system located within its municipal boundaries.

IE Policy 2.1.1
Ensure that surface cover vegetation loss during construction is minimized or replaced to reduce erosion and flooding.

IE Policy 2.1.2
Ensure that the developer or owner of any new development or redevelopment site is responsible for the on-site management of stormwater runoff so that post-development runoff rates, volumes, and pollutant loads do not exceed predevelopment conditions.

IE Policy 2.1.3
Future drainage outfalls associated with either new development or redevelopment, shall be designed to prevent the direct discharge of runoff into Boca Ciega Bay or the Gulf of Mexico.

IE Policy 2.1.4
Implement the town's Watershed Management Plan in conjunction with the Southwest Florida Water Management District to address existing drainage and flooding conditions.

IE Objective 2.2
All development within the Town of Redington Beach shall meet the adopted level-of-service standard for stormwater drainage.

IE Policy 2.2.1
All development activity shall adhere to the level-of-service standard for drainage requirements of the 25 year, 24 hour rainfall storm design standard.

IE Policy 2.2.2
New development, redevelopment, and rehabilitation shall meet

and maintain the standards established by the Florida Department of Environmental Regulation for the Outstanding Florida Waters and Aquatic Preserve designations of Boca Ciega Bay that require an additional fifty percent storage and treatment on site.

IE Policy 2.2.3
The following management techniques shall be used to reduce stormwater runoff:
1. Expansion and regular maintenance of retention swales adjacent to town roadways; and
2. Use of front, rear and side lot line swales for new construction or redevelopment;
3. Use of erosion and runoff control devices during construction/

IE Policy 2.2.4
The land development regulations shall continue to enforce provisions which, at a minimum, protect natural drainage features found within the Town as follows:
1. All applications for development approval within those areas identified as coastal high hazard area shall undergo site plan review;
2. The flood-carrying and flood storage capacity of the 100-year floodplain shall be maintained;
3. Development along Boca Ciega Bay shall maintain adequate setbacks to maintain any existing areas of natural coastal/marine habitat;
4. The prevention of erosion, retardation of runoff and protection of natural functions and values of the floodplain shall be considered while promoting public usage; and
5. The Town shall require development or redevelopment proposals to be consistent with the performance standards regulating development within the designated floodplain.

IE Objective 2.3
The Town shall take positive steps to implement its Watershed Management Plan.

IE Policy 2.3.1
The Town shall assess existing conditions and recommend modifications or cures to relieve existing drainage problems.

IE Policy 2.3.2
Consistent with budget allocations, the Town shall continue to retrofit the existing drainage system in conjunction with the Southwest Florida Water Management District.

Accordingly, the proposed ordinance is consistent with, and implements, numerous Goals, Objectives and Policies of the Town of Redington Beach Comprehensive Plan.

RECOMMENDATION

THAT THE REDINGTON BEACH PLANNING BOARD FIND ORDINANCE 2020-12 TO BE CONSISTENT WITH THE TOWN COMPREHENSIVE PLAN AND RECOMMEND THAT THE TOWN BOARD ADOPT THE ORDINANCE.

BC/RBMcL/m
C:\Red Bch\Planning Board\2020-12-08\RB PB Site Plans 2020-12-08.wpd

FDIVISION 3. - SITE PLANS AND SITE SKETCHES

Sec. 6-101 - Purpose.

The purpose of requiring a site plan or a site sketch is to ensure that any site or building construction or alterations done in the Town are done in compliance with the Town Code, the Town's Comprehensive Plan and all relevant State laws, rules and regulations.

Sec. 6-102 - Definitions.

For the purposes of this Code the following definitions apply:

(a) "Development" is the alteration of the physical characteristics of land or the construction or alteration of a structure.

(b) A "site plan" is a detailed diagram specifically demonstrating the physical changes to a property proposed as part of a development application for alteration of a lot or for the construction or alteration of a building on a lot. Unless waived by the Building Code Administrator or his designee, the site plan shall include all the information required by section 6-104 of this Code.

(c) A "site sketch" is a generalized drawing depicting the information necessary to evaluate a development where a site plan is not required.

~~Sec. 6-101. - Required.~~

~~All uses requiring building permits shall be subject to site plan review by the building department.~~

6-103 - Site Plan or Site Sketch Required.

Except as provided herein, all applications for development approvals shall be accompanied by a site plan.

(a) Where the proposed development does not affect the lot outside the footprint of an existing structure, no site plan or site sketch shall be required.

(b) A site sketch shall be submitted with any application for approval of a fence or of a seawall. The Building Code Administrator may also require submittal of a survey as part of

any application for approval of any exterior development.

~~Sec. 6-102. - Contents.~~

6-104 - Site Plan Submittal Requirements.

A site plan submitted pursuant to this division shall be signed and sealed by a registered engineer ~~or architect~~ and shall depict the following:

(a) The name and owner of the proposed development,

(b) The name and contact information of the preparer of the site plan.

(c) A vicinity map for the site.

(d) The land use designation and zoning district applicable to the site.

(e) Date, north arrow and a graphic scale not less then 1" = 50'.

(f) A statement of the general character of the proposed development.

(g) All information reasonably required by the Building Code Administrator to determine compliance with the regulations governing the proposed development.

(h) The locations of buildings and structures and their relation to property lines, the dimensions of each property line and all proposed improvements and alterations to the property including the proposed development as defined herein.

(I) Driveways and parking areas.

(j) Pedestrian walks and landscaping.

(k) Elevations and renderings, if required.

(l) Locations of all utilities, existing and proposed.

(m) Spot locations of major trees in excess of eight inches in diameter~~, and waterways~~.

(n) ~~Topography to the one-foot contour interval.~~ Existing and proposed spot elevations at 1/10th (one tenth) foot intervals with sufficient spacing to determine existing and future drainage patterns and the existing and proposed elevations of the four principal corners of

each structure on the lot.

(o) The elevation of the lowest habitable floor of the building in relation to ~~mean sea level~~ NAVD88.

(p) ~~When appropriate~~ For all properties on the west side of Gulf Boulevard, the coastal construction control line.

(q) Facilities for control of stormwater runoff ~~water~~.

(r) A statement that post-development runoff will not exceed pre-development runoff.

(s) The crown of the adjacent road(s).

(t) The flood zone applicable to the property and the base flood elevation.

(u) A table showing the existing and proposed impervious surface ratios.

(v) All site plans shall be prepared at an engineer's scale.

(w) All site plans shall be provided to the Building Code Administrator in electronic form in PDF format suitable for printing at 11" x 17". On request of the Building Code Administrator, paper copies at 24" x 36" shall be provided.

6-105 - Site Sketch Submittal Requirements.

A site sketch submitted pursuant to this division shall depict the following:

(a) The name and owner of the proposed development.

(b) The name and contact information of the preparer of the site sketch.

(c) Date, north arrow and a graphic scale not less then 1" = 50'.

(d) A statement of the general character of the proposed development.

(e) All information reasonably required by the Building Code Administrator to determine compliance with the regulations governing the proposed development.

(f) All proposed improvements and alterations to the property including the proposed

development as defined herein.

(g) For all properties on the west side of Gulf Boulevard, the coastal construction control line.

(h) Facilities for control of stormwater runoff.

(I) All site sketches shall be prepared at an engineer's scale.

(j) All site sketches shall be provided to the Building Code Administrator in electronic form in PDF format suitable for printing at 11" x 17". On request of the Building Code Administrator, paper copies at 24" x 36" shall be provided.

~~Sec. 6-103. - Guidelines.~~
~~The following criteria shall serve as guidelines for site plans:~~

Sec. 6-106 - Design Requirements.

(a) Impervious surface.
Impervious surface shall not exceed the allowable impervious lot coverage established in the future land use element of the adopted comprehensive plan. Subject to the provisions of Chapter 18.5 of this Code, properties presently developed with an impervious surface ratio greater than that permitted by the Comprehensive Plan may maintain their current ratio but may not increase their impervious area.

(b) Traffic circulation.
I. The Standard Details Manual found in Article IV of Chapter 18.5 of this Code shall govern traffic circulation design.
ii. Unrestricted access to streets is not allowed. ~~Generally, c~~ Curb cuts are limited to a maximum of one every 25 feet and shall comply with Chapter 19.5 of this Code.
iii. Access to streets ~~should~~ shall take into consideration sight distance and alignment.
iv. All sites must provide for emergency vehicle access.
v. Separate ingress and egress is encouraged.
vi. Traffic collection to reduce access points to Gulf Boulevard is encouraged.
vii. Maneuvering lanes between rows of parked automobiles shall be at least 20 feet in width.
viii. Traffic lanes shall conform to the same design standards as public streets

with regard to alignment at intersections.

ix. All buildings, exclusive of single-family dwellings, must provide for pedestrian circulation. Hard-surfaced pedestrian walks a minimum of four feet wide shall be provided generally as follows:

1. Along public rights-of-way.
2. Along access corridors to buildings.
3. At interconnecting points where significant numbers of people will seek to walk.

(c) Landscaping.

All uses shall be landscaped. Required landscaping may encompass the following:

I. Street trees or shrubs
ii Foundation planting.
iii Planting islands to define curb cuts.
iv. Perimeter plantings to define and beautify sites.
v. Parking lot and walkway landscaping.
vi. Buffer strips and screening for privacy.
~~vii. Landscaping for underutilized acreage.~~
viii. Landscaping for erosion control.
ix. Landscaping for recreation space.

Landscaping shall consist of 25 percent native plantings as presently defined by the University of Florida, Institute of Food and Agricultural Sciences. The use of punk trees, Australian pines and Brazilian pepper trees is prohibited. ~~The following listing provides a representative sample of native vegetation:~~

~~Common Name~~	~~Scientific Name~~
~~Railroad vine~~	~~Ipomoea pes-caprae~~
~~Firebush~~	~~Hamelia patens~~
~~Swamp hibiscus~~	~~Hibiscus coccineus~~
~~Cocoplum~~	~~Chrysobalanus icaco~~
~~Southern wax myrtle~~	~~Myrica cerifera~~
~~Sand live oak~~	~~Quercus geminata~~
~~Sea grape~~	~~Coccoloba uvifera~~
~~Southern red cedar~~	~~Juniperus silicicola~~
~~Bald cypress~~	~~Taxodium distichum~~
~~Dahoon holly~~	~~Ilex cassine~~
~~Live oak~~	~~Quercus virginiana~~
~~Longleaf pine~~	~~Pinus palustris~~
~~Sand pine~~	~~Pinus clausa~~
~~Slash pine~~	~~Pinus elliottii~~

~~Sweet gum~~	~~Liquidambar styraciflua~~
~~Gallberry~~	~~Ilex glabra~~
~~Cabbage palm~~	~~Sabal palmetto~~
~~Saw cabbage palm~~	~~Acoelorrhaphe wrightii~~
~~Saw palmetto~~	~~Serenoa repens~~

Plant material and installation standards.

I Quality. Plant materials used to meet the requirements of this section shall meet the standards for Florida No. 1 or better, as set out in Grades and Standards for Nursery Plants, part I and part II, Department of Agriculture, State of Florida. Root ball sizes on all transplanted plant materials shall also meet state standards.

a. At least 50 percent of the trees and 50 percent of the shrubs used to fulfill these requirements shall be native or naturalized Southern Floridian species, as determined by accepted valid scientific reference. The "Recommended Trees and Shrubs for the Town of Redington Beach List" is available for reference at town hall.

b. In addition, for all sites, at least 50 percent of the trees and shrubs used to fulfill these requirements shall be drought-tolerant species as listed in the South Florida Water Management District's Plants for Your Florida-Friendly Landscape.

c. Where Florida-friendly plants are to be utilized, planting and maintenance shall comply with The Florida-Friendly Landscaping Guide to Plant Selection & Landscape Design.

ii Trees and palms. All required new individual trees shall be species having an average mature spread or crown of greater than 20 feet and having trunk(s), which can be maintained in a clean condition with over ten feet of clear wood. Trees adjacent to walkways, bike paths and rights-of-way shall be maintained in a clean condition with over ten feet of clear wood. Trees having an average mature spread or crown less than 20 feet may be substituted by grouping the same so as to create the equivalent of a 20-foot crown spread. For code-required trees, at least 50 percent of the trees shall be canopy type trees and 50 percent may be palms. The minimum size of the trees at the time of installation shall be as follows:

Canopy trees:
(25 percent) Twelve to 14 feet on average height, six-foot spread, three-inch caliper, seven-foot clear trunk, 65-gallon minimum. Container or ball and burlaped (B&B).
(25 percent) Sixteen to 18 feet on average height, seven-foot spread, four-inch caliper, seven-foot clear trunk, 100 gallon minimum. Container or ball and burlaped (B&B).

Palms:
(25 percent) Twelve-foot clear trunk height minimum with 15-foot minimum mature clear trunk height.
(25 percent) Fifteen-foot clear trunk height minimum with 18-foot minimum mature clear trunk height.

A grouping of three palm trees will be equivalent to one canopy tree. Exceptions will be made for Roystonia spp. (Florida Royal Palm) and Phoenix spp. (Canary Island Date Palm not including Roebelenii) which shall count one palm tree for one canopy tree. Also, exceptions will be made for Cocos spp. (Coconut Palm) and Arecastrum spp. (Queen Palm) which shall count two palm trees for one canopy tree. In side and rear yard locations, palms can only be substituted for 50 percent of the canopy tree requirement. Front yards may have 75 percent palms

(iii) Tree species mix. When trees are required to be planted to meet the requirements of this code, a mix of species shall be provided. The number of species to be planted shall vary according to the overall number of trees required to be planted. The minimum numbers of species to be planted are indicated below.

Required Species Mix

Required Number of Trees	Minimum Number of Species
2-10	2
11-20	3
21-30	4
31+	5

(iv) Ground covers. Prior to the issuance of a certificate of occupancy for any single-family residence, multifamily, or commercial, development, ground coverings, as described below, shall be installed. Artificial turf or similar synthetic turf materials are expressly prohibited as ground cover

a. Lawn grass. All lawn areas shall be sodded and/or planted with turf species normally grown as permanent lawns within the Southwest Florida area. Solid sod shall be used in swales or other areas subject to erosion. The use of drought-tolerant species is required

b. Florida-friendly landscape. Florida-friendly landscape practices are required in all zoning districts. Landscape areas utilizing Florida-friendly designs are those that comply with the principles of Florida-Friendly Landscape consistent with the standards

provided in the following publications:

- "Florida Yards and Neighborhoods (FAN) and Environmental Landscape Management (ELM)," the University of Florida Cooperative Extension Service (UP-IAS)
- "Florida-Friendly Best Management Practices for Protection of Water Resources by the Green Industries (2008)," Florida Water Management Districts
- "The Florida Yards & Neighborhoods Handbook", Florida Water Management Districts
- "Waterline Florida Landscape Guide," Xeric Landscaping with Florida Native Plants," Association of Florida Nurseries
- 'Waterfront Property Owner's Guide," Florida Department of Environmental Protection

Landscape designs utilizing the Florida-friendly landscape principles shall be employed for the protection of water quality and water conservation and shall incorporate the following principles:

1. The right plant in the right place;
2. Efficient watering with properly zoned irrigation systems;
3. Appropriate fertilization;
4. Mulching properly;
5 Responsible management of yard pests with limited use of chemicals;
6 Recycling yard waste;
7. Reduction of stormwater runoff; and
8. Waterfront protection.

Minimum landscaping requirements.

Landscaping for all new development, including single-family, multifamily, office and commercial, uses shall include as a minimum, the number of trees set forth below. When calculating minimum tree requirements, a fractional unit of 0.50 or greater shall require an additional tree.

(1) Single-family homes: One canopy tree per 2,500 square feet of lot area. One or more canopy trees, palms, or grouping of palms meeting the code requirements shall be located within ten feet of the front property line.

(2) Multifamily developments. One canopy tree per 1,500 square feet of pervious site area. This is in addition to other landscaping requirements.

(3) Commercial and institutional developments. One canopy tree per

3,000 square feet of pervious site areas. This is in addition to other landscaping requirements.

(4) Building perimeter plantings. All commercial and multifamily developments shall provide building perimeter plantings in the amount of 100 square feet per 1,000 square feet of proposed building ground level floor area. These planting areas shall be located adjacent to the building and shall consist of landscape areas, raised planters, or planter boxes that are a minimum of five feet wide.

AGENDA ITEM 7c.
Ordinance 2020-13

FLORIDA MUNICIPAL SERVICES
c/o 17425 Gulf Blvd.
Redington Shores, FL 33708
(727) 202-6825

December 7, 2020

Meeting Date: December 8, 2020
Agenda Item 7.c
Advertised Public Hearing

MEMORANDUM

TO: Redington Beach Planning Board

FROM: Bruce Cooper, CBO, CFM, Building Official
R. Bruce McLaughlin, AICP, MCIP, Town Planner

SUBJECT: Proposed Ordinance 2020-13. Floodplain Management Code Rewrite

On the December 8, 2020, agenda is an advertised public hearing for the repeal and replacement of the Floodplain Management Code, Town Code Chapter 10. This item was scheduled in anticipation that amendments to this Chapter would be required to fulfill the mandate of Ordinance 2019-10 for mitigative techniques to offset the higher impervious surface ratio permitted by Ordinance 2019-10. However, on closer review, no amendments to Chapter 10 are required to fulfill the mandate of Ordinance 2019-10.

However, that closer review indicated that the repeal and replacement of the Chapter are still warranted. In addition to a significant scrivener's error related to a reporting location, Chapter 10 is presently an omnibus floodplain management ordinance with provisions governing mountain gorges in the Pacific Northwest, riverine situations in the plains states and the Gulf Coast. The Code also references land uses not extant in Redington Beach such as industrial uses and mobile home parks.

This surplus language is potentially problematic because, for example, it could lead a developer to believe that, since Chapter 10 regulates mobile home parks, such a use is permitted in the

Town of Redington Beach, even though the zoning code prohibits such a use. Accordingly, the repeal and replacement of Chapter 10 with a code much more narrowly tailored to the Town of Redington Beach is appropriate. However, this effort should occur independently of the package of ordinances creating the mitigative techniques required by Ordinance 2019-10.

Accordingly, staff recommends that the public hearing on Ordinance 2020-13 be opened and continued to a date certain so as to preserve the published public hearing date. At the continued public hearing Staff will present a revised Chapter 10 that is narrowly tailored to the Town of Redington Beach.

BC/RBMcL/m
C:\Red Bch\Planning Board\2020-12-08\RB PB Flood 2020-12-08.wpd

FOR DISCUSSION PURPOSES ONLY AS COMPANION TO ORDINANCE 2020-14 RESOLUTION TO BE REFERRED TO FINANCE COMMITTEE AND RE-REVIEWED BY PLANNING BOARD PRIOR TO ENACTMENT

RESOLUTION 2020-13

A RESOLUTION OF THE TOWN COMMISSION OF THE TOWN OF REDINGTON BEACH, PINELLAS COUNTY, FLORIDA, SETTING THE STORMWATER UTILITY MANAGEMENT FEE PURSUANT TO TOWN CODE CHAPTER 18.5, ARTICLE II, MAKING RELATED FINDINGS; PROVIDING FOR SEVERABILITY AND ESTABLISHING AN EFFECTIVE DATE

WHEREAS, Article II of Chapter 18.5 of the Town Code establishes and provides for the collection of Stormwater Management Utility Fees; and

WHEREAS, the current Stormwater Management Utility Fee was set in 2006, has not been amended since, and is found in Section 18.5-21 of the Town Code; and

WHEREAS, Section 18.5-21 has been amended to require the Town Board of Commissioners to set the Stormwater Management Fee by resolution; and

WHEREAS, the imposition of a Stormwater Management Fee is an equitable and efficient method of allocating and apportioning the cost of the Town's Stormwater Management Service among parcels of property that are burdening the Town's Stormwater System and thus specially benefitted by provision of the Stormwater Utility; and

WHEREAS, the Town has embarked on a program of capital improvements to its stormwater system, is seeking and has sought and obtained grants for said improvements; and

WHEREAS, the fee established by this Resolution has been reviewed by the Town's Finance Committee and recommended for adoption; and

WHEREAS, the fee established by this Resolution has been reviewed by the Town's Planning Board acting as the Local Planning Agency, and recommended for adoption; and

WHEREAS, this Resolution has been presented to property owners in, and residents of, the Town at public hearings on December 8, 2020, December 16, 2020, *.

FOR DISCUSSION PURPOSES ONLY AS COMPANION TO ORDINANCE 2020-14 RESOLUTION TO BE REFERRED TO FINANCE COMMITTEE AND RE-REVIEWED BY PLANNING BOARD PRIOR TO ENACTMENT

NOW THEREFORE BE IT RESOLVED BY THE BOARD OF COMMISSIONERS FOR THE TOWN OF REDINGTON BEACH, FLORIDA IN A MEETING DULY ADVERTISED AND REGULARLY ASSEMBLED AS FOLLOWS:

Section 1 - Findings.

1. The foregoing recitals are affirmed as findings of fact by the Town Board.

2. The Town's stormwater engineer has calculated a fee of * per unit to be equitable and appropriate taking into account the proposed expenditures for the stormwater system set out in the Town's Schedule of Capital Improvements in the Capital Improvements Element of the Town's Comprehensive Plan and in the Town's stormwater system planning.

3. The Town's Finance Committee and Planning Board concur that the fee established by this Resolution is equitable and appropriate.

Section 2 - Fee Established,

The Stormwater Utility Fee established by established by Article II of Chapter 18.5 of the Town Code is the rate of * per month multiplied by the number of dwelling units, hotel or motel units, and/or business units exsting on each parcel of record.

Section 3 - Severability.

Any portion of this Resolution deemed unconstitutional or otherwise invalid at law is severable from the remainder hereof.

Section 4 - Effective Date

This Resolution shall become effective immediately upon final passage and adoption.

PASSED AND ADOPTED by the Board of Commissioners of the Town of Redington Beach, Pinellas County, Florida, on this ___ day of _____, 2021.

Chapter 18.5 - STORMWATER

ARTICLE I. - IN GENERAL

Sec. 18.5-1. - Intent.

This chapter is adopted by the Town of Redington Beach for the purpose of maintaining efficient, economic and safe operation of the separate storm sewers, and for the protection of the health, safety, and general welfare of the public. This chapter is intended to prevent and abate pollution through the regulation and control of connections and discharges to the town's separate storm systems and to limit the use of the separate storm sewer system to the collection, conveyance, treatment, and disposal of stormwater through appropriate regulation and enforcement. The prohibitive discharge standards contained herein were developed under the authority of Section 5 of the Clean Water Act and 40 CFR 122 applicable ~~DER~~, Florida Department of Environmental Protection (FDEP), Southwest Florida Water Management District (SWFWMD) regulations and applicable home rule power.

Sec. 18.5-2. - Definitions.

The following definitions shall apply to the provisions of this article:

Authorized official means any employee or agent of the Town of Redington Beach authorized in writing by the mayor to administer or enforce the provisions of this article.

Discharge means any direct or indirect introduction of any solid, liquid or gaseous matter.

Illicit discharge means any discharge to a separate storm sewer that is not composed entirely of stormwater except discharges pursuant to a National Pollution Discharge Elimination System (NPDES) permit (other than NPDES permit for discharges from the separate storm sewer) and discharges resulting from firefighting activities.

Person means any natural individual, corporation, partnership, institution or other entity.

Site of industrial activity means any ~~are~~ area or facility used for manufacturing, processing or raw materials storage, as defined under 40 CFR Section 122.26(b)(14) of regulations of the U.S. Environmental Protection Agency ~~as amended~~.

Separate stormwater system means the system of conveyances used for collecting, storing and transporting stormwater owned by the Town of Redington Beach but not included any facilities intended to be used in accordance with applicable law for collecting and transporting

sanitary or other waste water.

Stormwater means any stormwater runoff, and surface runoff and drainage.

Sec. 18.5-3. - Illicit discharges.

(a) General prohibitions. Except as set forth under subsection (c) of this section or as in accordance with a valid NPDES permit, any discharge to the separate stormwater system that is not composed entirely of stormwater is prohibited.

(b) Specific prohibitions.

(I) Any discharge to the separate stormwater system containing any sewage, industrial waste or other waste materials, or containing any materials in violation of federal, state, county, municipal, or other laws, rules, regulations, orders or permits, is prohibited.

(ii) Any discharge from a lot developed after the effective date of Ordinance 2020-14 which is developed with an impervious surface ratio greater than 0.65 is prohibited.

(iii) Any discharge from a construction site is prohibited.

(c) Authorized exceptions. The following discharges are exempt from the general prohibition set forth under subsection (a) of this section, flows from firefighting, waterline flushing and other contributions from potable water sources, landscape irrigation and lawn watering, irrigation water, ~~diverted stream flows,~~ tidal backflows, rising groundwater, direct infiltration to the separate stormwater system, uncontaminated pumped groundwater, foundation and footing drains, water from crawl space pumps, air conditioning condensation, springs, individual residential car washing, flows from riparian habitats and wetlands.

(d) Illicit connections. No person may maintain, use or establish any direct or indirect connection to the separate stormwater system that results in any discharge in violation of this chapter. This prohibition applies to connections made in the past, regardless of whether made under a permit, or other authorization, or whether permissible under laws or practices applicable or prevailing at the time the connection was made.

Sec. 18.5-4. - Spills and dumping.

(a) General prohibitions. Except as set forth under subsection 18.5-3(c) of this chapter or as in accordance with a valid NPDES permit, any discharge to the separate stormwater system that is not composed entirely of stormwater is prohibited.

(b) Specific prohibitions.

(I) Any discharge to the separate stormwater system containing any sewage, industrial waste or other waste materials, or containing any materials in violation of federal, state, county, municipal, or other laws, rules, regulations, orders or permits, is prohibited.

(ii) Any discharge from a lot developed after the effective date of Ordinance 2020-14 which is developed with an impervious surface ratio greater than 0.65 is prohibited.

(iii) Any discharge from a construction site is prohibited.

(c) Notification of spills. As soon as any person has knowledge of any discharge to the correct separate stormwater system in violation of this chapter, such person shall immediately notify the town clerk or his/her designee by telephoning (727) 391-3875, and if such person is directly or indirectly responsible for such discharge, then such person shall also take immediate action to ensure the containment and clean up of such discharge and shall confirm such telephone notification in writing to the town clerk or his/her designee at Town Hall, 105 164th Avenue, Redington Beach, Florida 33708, within three calendar days.

Sec. 18.5-5. - Inspections and monitoring.

(a) Authority for inspections. Whenever necessary to make an inspection to enforce any of the provisions of this chapter, or regulation or permit issued hereunder, or whenever an authorized official has reasonable cause to believe there exists any condition constituting a violation of any of the provisions of this chapter, or regulation or permit issued hereunder, any authorized official may enter any property, building or facility at any reasonable time to inspect the same or to perform any duty related to enforcement of the provisions of this chapter or any regulations or permits issued hereunder; provided that (1) if such property, building or facility is occupied, such authorized official shall first present proper credentials and request permission to enter, and (2) if such property, building or facility is unoccupied, such authorized official shall make a reasonable effort to locate the owner or other person having charge or control of the property, building or facility, and shall request permission to enter. Any request for permission to enter made hereunder shall state that the owner or person in control has the right to refuse entry, and that in such event that entry is refused, the authorized official may enter to make inspection only upon issuance of a search warrant by a duly authorized magistrate. If the owner or person in control refuses permission to enter after such request has been made, the authorized official is hereby authorized to seek assistance from any court of competent jurisdiction in obtaining entry. Routine or area-wide inspections shall be based upon such reasonable selection processes as may be necessary to carry out the purposes of this chapter, including but not limited to random sampling and sampling in areas with evidence of stormwater contamination, nonstormwater discharges, or similar factors.

(b) Authority for monitoring and sampling. Any authorized official may install and maintain such devices as are necessary to conduct sampling or metering of discharges to the separate stormwater system. During any inspections made to enforce the provisions of this chapter, or regulations or permits issued hereunder, any authorized official may take any samples deemed necessary.

(c) Requirements for monitoring. The ~~director of public works~~ Town Building Official may require any person engaging in any activity or owning any property, building or facility to undertake such reasonable monitoring of any discharge(s) to the separate stormwater system and to furnish periodic reports.

Sec. 18.5-6. - Administrative order.

The town clerk or his/her designee may issue an order to any person to immediately cease any discharge, or eliminate any connection to the separate storm sewer system, determined by the town clerk or his/her designee to be in violation of any provision of this chapter, or in violation of any regulation or permit issued hereunder.

Sec. 18.5-7. - Penalties.

Failure to comply with the requirements of this chapter or any permit or approval granted or authorized hereunder shall constitute a violation of this chapter. Violations of the provisions of this chapter shall, upon conviction, be punished by a fine not to exceed $500.00 per day or by imprisonment in the county jail, not to exceed 60 days or by both fine and imprisonment pursuant to the provisions of ~~F.S. § 125.69~~ Florida Law. If a violation be continued, each day of such violation shall constitute a separate offense.

Sec. 18.5-8. - Civil remedies.

In addition to the penalties provided in section 18.5-6, the board of commissioners is hereby authorized to institute any appropriate action or proceeding, including suit for injunctive relief, in order to prevent or abate violations of this chapter.

Secs. 18.5-9—18.5-19. - Reserved.

ARTICLE II. - STORMWATER MANAGEMENT UTILITY FEES

Sec. 18.5-20. - Created.

A stormwater management utility fee, also referred to hereinafter as "fee," is hereby created and imposed on all developed property within the town for services and facilities provided by the stormwater management program. For the purpose of imposing the fee, all developed property within the town shall be classified as residential property.

Sec. 18.5-21. - Schedule of rates.

(a) The fee for "residential property" ~~is the rate of $7.50 per month multiplied by the number of dwelling units, hotel or motel units and/or business units existing on the property.(b)Public rights-of-way and other public properties are exempt from the fee~~ shall be set by the board of commissioners by resolution from time to time.

Sec. 18.5-22. - Billing, payment, penalties and enforcement.

(a)Bills for stormwater service shall be rendered bimonthly by ~~the~~ Pinellas County ~~Water System~~ Utilities as agent for the town. The fixed monthly charge shall take effect ~~October 1, 1995~~ as provided by resolution.

(b) If any bills shall not be paid ~~within seven days after the date it has been declared delinquent,~~ in accordance with the policies and practices of Pinellas County Utilities, ~~water service to the premises shall be disconnected until such delinquent account is paid in full, including all applicable disconnection and reconnection charges~~ enforcement shall occur in accordance with the policies and practices of Pinellas County Utilities.

(c) Statements for the stormwater management utility fee shall be ~~payable at the same time and in the same manner and subject to the same penalties as are otherwise set forth for the utility fees administered by the town. The property owner or fee payer will be notified of any delinquency in the payment of the stormwater management utility fee in the same manner that they are notified for delinquent water, garbage and sewer bills. Failure to pay such fee as is otherwise provided in the statement rendered to the payer shall subject the property to the discontinuance of water, garbage and sewer services and shall subject the fee payer to all other penalties and charges provided relative to the discontinuance of such utility services~~ processed in accordance with the policies and practices of Pinellas County Utilities.

Secs. 18.5-23—18.5-29. - Reserved.

ARTICLE III. - STORMWATER UTILITY FUND

Sec. 18.5-30. - Created.

There ~~shall be~~ is established a stormwater management utility fund for the deposit of all fees collected pursuant to this chapter. The fund will be used exclusively to provide services and facilities related to the stormwater management program. The funds shall be used only for the following expenditures and shall be held as trust funds of the town.

(1) Operation and maintenance of stormwater management facilities under the jurisdiction of the town;
(2) Costs for the evaluation, design, construction management, and construction of major and minor structural improvements of the stormwater management infrastructure;
(3) Administrative costs related to the management of the stormwater program;
(4) Management services such as permit review and planning and development review related to the stormwater management program; and
(5) Debt service financing of capital improvements related to the stormwater management program in accordance with F.S. §§ 403.0891 and 403.0893.

AGENDA ITEM 7d.
Ordinance 2020-14

FLORIDA MUNICIPAL SERVICES
c/o 17425 Gulf Blvd.
Redington Shores, FL 33708
(727) 202-6825

December 7, 2020

Meeting Date: December 8, 2020
Agenda Items 7.d, 7.f
Advertised Public Hearing

M E M O R A N D U M

TO: Redington Beach Planning Board

FROM: R. Bruce McLaughlin, AICP, MCIP, Town Planner

SUBJECT: Proposed Ordinance 2020-14, Stormwater Management Requirements: Proposed Resolution 2020-13 - Stormwater Management Utility Fee

EXECUTIVE SUMMARY

Ordinance 2019-10 imposes certain mitigative stormwater techniques on site development proposals. These techniques are applied in part through the stormwater management process. The current stormwater regulations also required rewriting to remove archaic requirements and to clarify and add certain requirements with respect to stormwater management. Ordinance 2020-14 implements and is consistent with Ordinance 2019-10 and resolves numerous problems in the current code. **STAFF RECOMMENDS THAT THE BOARD FIND ORDINANCE 2020-14 CONSISTENT WITH THE COMPREHENSIVE PLAN AND RECOMMEND ITS APPROVAL.** The companion Resolution 2020-13 is provided for information only to demonstrate how the Stormwater Management Utility Fee will ultimately be established.

BACKGROUND

Applicant Town of Redington Beach

Affected Area Entire Town

THE REQUEST

That the Planning Board review proposed Ordinance 2020-14, find the Ordinance consistent with the Town's Comprehensive Plan and recommend it to the Town Board for approval. Further, that Planning Board endorse the form of Resolution 2020-13.

NOTICE

The Clerk's office will advise as to the notice given of this advertised public hearing.

AUTHORITY

Pursuant to §§ 4 and 5 of the Town Charter, the Town is governed by the Board of Commissioners which may exercise all powers available to a municipality under the Constitution and laws of the State of Florida. Those powers include preparing and adopting (via § 15-56 of the Town Code), a comprehensive plan for the Town and related land development and other, related, regulations.

The proposed amendment to the Town's Stormwater Code is an amendment to a land development regulation as defined by § 163.3164(26), F.S. Accordingly, § 163.3174(2)(c) and Town Code § 15-34 require this Board to review the subject ordinance and make a determination of its consistency with the Town's Comprehensive Plan. The Board should also make a recommendation as to the adoption of Ordinance 2020-14.

ANALYSIS

As a preliminary note, it should be pointed out that draft Ordinance 2020-14 was reviewed and approved by the Town's National Pollution Discharge Elimination System (NPDES) Consultant.

The first substantive change is the prohibition of discharges into the stormwater system from lots built at an illegal impervious surface ratio (ISR). While hopefully this situation will be prevented

by the building permit approval process, it provides an additional sanction against any person who illicitly adds to the impervious surface of his lot.

Likewise, the ban on discharges from construction sites implements Ordinance 2019-10 since a construction site could have a temporary ISR of greater than 0.65.

Ordinance 2020-14 also revises the language dealing with the collection of the Stormwater Management Utility Fee to reflect the reality of how the fee is administered by Pinellas County Utilities.

Finally, the Ordinance takes out the fee currently set in the Code and provides for setting the fee by Resolution. So as not to leave a vacuum where the fee will be set, Resolution 2020-13 is provided for the Board's review. Comments on the form of the Resolution are sought but the fee itself will not be set until later when an accurate fee can be determined and reviewed by the Town's Finance Committee.

(Staff is also considering additional stormwater regulations which may be presented in person at the Board's December 8 meeting.)

COMPREHENSIVE PLAN CONSISTENCY

First, Ordinance 2020-14 implements the mandate of the Comprehensive Plan Amendment adopted by Ordinance 2019-10:

> .. The land development regulations implementing this Policy shall:
>
> 1. reaffirm the Building Official's authority to enforce this Policy;
> 2. provide that the Building Official may confer with engineers and with professionals in other relevant fields to provide comprehensive review and approval of drainage plans and specifications for any project that increases the impervious surface ratio on the subject property.
> 3. The drainage design, construction and inspection requirements shall be consistent with the Town's land development regulations, and with the Pinellas County Stormwater Manual (February 1, 2017).

4. More generally, the goals of stormwater management are to minimize the adverse effects of urban development on communities, watersheds, water bodies, wetlands, floodplains and other natural systems. These goals should be applied to redevelopment situations so that existing stormwater conditions are appropriately improved with reconstruction. More specifically, these goals include:
   a. Reducing pollutant concentrations and loadings to a level to ensure that discharges do not cause or contribute to violations of State water quality standards.
   b. Preventing or reducing on-site and off-site flooding.
   c. Maintaining or restoring the hydrologic integrity of wetlands and aquatic habitats.
   d. Maintaining and promoting groundwater recharge.
   e. Promoting the reuse of rainfall and stormwater.
   f. Minimizing erosion and sedimentation.
   g.. Accounting for impacts to the project based on sea level rise projections.
5. The Town shall adopt, implement and maintain a Standard Details Manual to supplement the Pinellas County Stormwater Manual in order to provide guidance and criteria to the design and building community for best management practices unique to the Town's character.

The Ordinance is also consistent with and implements the following Comprehensive Plan Policies:

[FLU] Policy 1.1.2
Residential areas shall be located and designed to protect life and property from natural and manmade hazards such as flooding, excessive traffic, subsidence, noxious odors, and noise.

[FLU] Policy 1.1.4
The Town shall continue to implement performance standards, such as buffering and open space requirements, within the land development regulations, as appropriate.

[FLU] Objective 1.5
All development orders and permits for development and redevelopment activities shall be issued only if the public facilities necessary to meet the level-of-service standards as adopted pursuant to this comprehensive plan, are available concurrent with the impacts of the development.

[FLU] Policy 2.3.1
The Town of Redington Beach, acknowledging its particular vulnerability to coastal hazards as a barrier island community, recognizes the entire town as within the Coastal Storm Area ...

[FLU] Policy 3.1.4
The land development regulations shall contain specific and detailed provisions required to implement this comprehensive plan, which, at a minimum:
...
7. Provide for drainage and stormwater management, based on the minimum criteria established by the Southwest Florida Water Management District, the Town of Redington Beach or other appropriate governmental agencies;
8. Provide requirements for the provision of open space, and safe and convenient on-site traffic flow and parking requirements;
9. Encourage the use of native vegetation in the landscaping of multi-family and commercial developments; and
10. Provide provisions for the control of erosion and runoff from construction sites.

IE Policy 1.2.4
The Town shall continue to promote the use of native and drought-tolerant landscaping as a means of conserving water.

IE Goal 2:
To endeavor to provide an efficient drainage system which protects human life, minimizes property damage, and improves stormwater quality and on-site retention.

IE Objective 2.1
The Town shall seek to improve the stormwater drainage system located within its municipal boundaries.

IE Policy 2.1.1
Ensure that surface cover vegetation loss during construction is minimized or replaced to reduce erosion and flooding.

IE Policy 2.1.2
Ensure that the developer or owner of any new development or redevelopment site is responsible for the on-site management of stormwater runoff so that post-development runoff rates, volumes, and pollutant loads do not exceed predevelopment conditions.

IE Policy 2.1.3
Future drainage outfalls associated with either new development or redevelopment, shall be designed to prevent the direct discharge of runoff into Boca Ciega Bay or the Gulf of Mexico.

IE Policy 2.1.4
Implement the town's Watershed Management Plan in conjunction with the Southwest Florida Water Management District to address existing drainage and flooding conditions.

IE Objective 2.2
All development within the Town of Redington Beach shall meet the adopted level-of-service standard for stormwater drainage.

IE Policy 2.2.1
All development activity shall adhere to the level-of-service standard for drainage requirements of the 25 year, 24 hour rainfall storm design standard.

IE Policy 2.2.2
New development, redevelopment, and rehabilitation shall meet and maintain the standards established by the Florida Department of Environmental Regulation for the Outstanding Florida Waters and Aquatic Preserve designations of Boca Ciega Bay that require an additional fifty percent storage and treatment on site.

IE Policy 2.2.3
The following management techniques shall be used to reduce stormwater runoff:
1. Expansion and regular maintenance of retention swales adjacent to town roadways; and
2. Use of front, rear and side lot line swales for new construction or redevelopment;
3. Use of erosion and runoff control devices during construction/

IE Policy 2.2.4
The land development regulations shall continue to enforce provisions which, at a minimum, protect natural drainage features found within the Town as follows:
1. All applications for development approval within those areas identified as coastal high hazard area shall undergo site plan review;
2. The flood-carrying and flood storage capacity of the 100-year floodplain shall be maintained;
3. Development along Boca Ciega Bay shall maintain adequate setbacks to maintain any existing areas of natural coastal/marine habitat;
4. The prevention of erosion, retardation of runoff and protection of natural functions and values of the floodplain shall be considered while promoting public usage; and
5. The Town shall require development or redevelopment proposals to be consistent with the performance standards regulating development within the designated floodplain.

IE Objective 2.3
The Town shall take positive steps to implement its Watershed Management Plan.

IE Policy 2.3.1
The Town shall assess existing conditions and recommend modifications or cures to relieve existing drainage problems.

IE Policy 2.3.2
Consistent with budget allocations, the Town shall continue to

retrofit the existing drainage system in conjunction with the Southwest Florida Water Management District.

Accordingly, the proposed ordinance is consistent with, and implements, numerous Goals, Objectives and Policies of the Town of Redington Beach Comprehensive Plan.

RECOMMENDATION

THAT THE REDINGTON BEACH PLANNING BOARD FIND ORDINANCE 2020-14 TO BE CONSISTENT WITH THE TOWN COMPREHENSIVE PLAN AND RECOMMEND THAT THE TOWN BOARD ADOPT THE ORDINANCE AND THAT THE BOARD ENDORSE THE FORM OF RESOLUTION 2020-13.

RBMcL/m
C:\Red Bch\Planning Board\2020-12-08\RB PB Stormwater 2020-12-08.wpd

Chapter 18.5 - STORMWATER

ARTICLE I. - IN GENERAL

Sec. 18.5-1. - Intent.

This chapter is adopted by the Town of Redington Beach for the purpose of maintaining efficient, economic and safe operation of the separate storm sewers, and for the protection of the health, safety, and general welfare of the public. This chapter is intended to prevent and abate pollution through the regulation and control of connections and discharges to the town's separate storm systems and to limit the use of the separate storm sewer system to the collection, conveyance, treatment, and disposal of stormwater through appropriate regulation and enforcement. The prohibitive discharge standards contained herein were developed under the authority of Section 5 of the Clean Water Act and 40 CFR 122 applicable ~~DER~~, Florida Department of Environmental Protection (FDEP), Southwest Florida Water Management District (SWFWMD) regulations and applicable home rule power.

Sec. 18.5-2. - Definitions.

The following definitions shall apply to the provisions of this article:

Authorized official means any employee or agent of the Town of Redington Beach authorized in writing by the mayor to administer or enforce the provisions of this article.

Discharge means any direct or indirect introduction of any solid, liquid or gaseous matter.

Illicit discharge means any discharge to a separate storm sewer that is not composed entirely of stormwater except discharges pursuant to a National Pollution Discharge Elimination System (NPDES) permit (other than NPDES permit for discharges from the separate storm sewer) and discharges resulting from firefighting activities.

Person means any natural individual, corporation, partnership, institution or other entity.

Site of industrial activity means any ~~are~~ area or facility used for manufacturing, processing or raw materials storage, as defined under 40 CFR Section 122.26(b)(14) of regulations of the U.S. Environmental Protection Agency ~~as amended~~.

Separate stormwater system means the system of conveyances used for collecting, storing and transporting stormwater owned by the Town of Redington Beach but not included any facilities intended to be used in accordance with applicable law for collecting and transporting

sanitary or other waste water.

Stormwater means any stormwater runoff, and surface runoff and drainage.

Sec. 18.5-3. - Illicit discharges.

(a) General prohibitions. Except as set forth under subsection (c) of this section or as in accordance with a valid NPDES permit, any discharge to the separate stormwater system that is not composed entirely of stormwater is prohibited.

(b) Specific prohibitions.

(I) Any discharge to the separate stormwater system containing any sewage, industrial waste or other waste materials, or containing any materials in violation of federal, state, county, municipal, or other laws, rules, regulations, orders or permits, is prohibited.

(ii) Any discharge from a lot developed after the effective date of Ordinance 2020-14 which is developed with an impervious surface ratio greater than 0.65 is prohibited.

(iii) Any discharge from a construction site is prohibited.

(c) Authorized exceptions. The following discharges are exempt from the general prohibition set forth under subsection (a) of this section, flows from firefighting, waterline flushing and other contributions from potable water sources, landscape irrigation and lawn watering, irrigation water, ~~diverted stream flows,~~ tidal backflows, rising groundwater, direct infiltration to the separate stormwater system, uncontaminated pumped groundwater, foundation and footing drains, water from crawl space pumps, air conditioning condensation, springs, individual residential car washing, flows from riparian habitats and wetlands.

(d) Illicit connections. No person may maintain, use or establish any direct or indirect connection to the separate stormwater system that results in any discharge in violation of this chapter. This prohibition applies to connections made in the past, regardless of whether made under a permit, or other authorization, or whether permissible under laws or practices applicable or prevailing at the time the connection was made.

Sec. 18.5-4. - Spills and dumping.

(a) General prohibitions. Except as set forth under subsection 18.5-3(c) of this chapter or as in accordance with a valid NPDES permit, any discharge to the separate stormwater system that is not composed entirely of stormwater is prohibited.

(b) Specific prohibitions.

(I) Any discharge to the separate stormwater system containing any sewage, industrial waste or other waste materials, or containing any materials in violation of federal, state, county, municipal, or other laws, rules, regulations, orders or permits, is prohibited.

(ii) Any discharge from a lot developed after the effective date of Ordinance 2020-14 which is developed with an impervious surface ratio greater than 0.65 is prohibited.

(iii) Any discharge from a construction site is prohibited.

(c) Notification of spills. As soon as any person has knowledge of any discharge to the correct separate stormwater system in violation of this chapter, such person shall immediately notify the town clerk or his/her designee by telephoning (727) 391-3875, and if such person is directly or indirectly responsible for such discharge, then such person shall also take immediate action to ensure the containment and clean up of such discharge and shall confirm such telephone notification in writing to the town clerk or his/her designee at Town Hall, 105 164th Avenue, Redington Beach, Florida 33708, within three calendar days.

Sec. 18.5-5. - Inspections and monitoring.

(a) Authority for inspections. Whenever necessary to make an inspection to enforce any of the provisions of this chapter, or regulation or permit issued hereunder, or whenever an authorized official has reasonable cause to believe there exists any condition constituting a violation of any of the provisions of this chapter, or regulation or permit issued hereunder, any authorized official may enter any property, building or facility at any reasonable time to inspect the same or to perform any duty related to enforcement of the provisions of this chapter or any regulations or permits issued hereunder; provided that (1) if such property, building or facility is occupied, such authorized official shall first present proper credentials and request permission to enter, and (2) if such property, building or facility is unoccupied, such authorized official shall make a reasonable effort to locate the owner or other person having charge or control of the property, building or facility, and shall request permission to enter. Any request for permission to enter made hereunder shall state that the owner or person in control has the right to refuse entry, and that in such event that entry is refused, the authorized official may enter to make inspection only upon issuance of a search warrant by a duly authorized magistrate. If the owner or person in control refuses permission to enter after such request has been made, the authorized official is hereby authorized to seek assistance from any court of competent jurisdiction in obtaining entry. Routine or area-wide inspections shall be based upon such reasonable selection processes as may be necessary to carry out the purposes of this chapter, including but not limited to random sampling and sampling in areas with evidence of stormwater contamination, nonstormwater discharges, or similar factors.

(b) Authority for monitoring and sampling. Any authorized official may install and maintain such devices as are necessary to conduct sampling or metering of discharges to the separate stormwater system. During any inspections made to enforce the provisions of this chapter, or regulations or permits issued hereunder, any authorized official may take any samples deemed necessary.

(c) Requirements for monitoring. The ~~director of public works~~ Town Building Official may require any person engaging in any activity or owning any property, building or facility to undertake such reasonable monitoring of any discharge(s) to the separate stormwater system and to furnish periodic reports.

Sec. 18.5-6. - Administrative order.

The town clerk or his/her designee may issue an order to any person to immediately cease any discharge, or eliminate any connection to the separate storm sewer system, determined by the town clerk or his/her designee to be in violation of any provision of this chapter, or in violation of any regulation or permit issued hereunder.

Sec. 18.5-7. - Penalties.

Failure to comply with the requirements of this chapter or any permit or approval granted or authorized hereunder shall constitute a violation of this chapter. Violations of the provisions of this chapter shall, upon conviction, be punished by a fine not to exceed $500.00 per day or by imprisonment in the county jail, not to exceed 60 days or by both fine and imprisonment pursuant to the provisions of ~~F.S. § 125.69~~ Florida Law. If a violation be continued, each day of such violation shall constitute a separate offense.

Sec. 18.5-8. - Civil remedies.

In addition to the penalties provided in section 18.5-6, the board of commissioners is hereby authorized to institute any appropriate action or proceeding, including suit for injunctive relief, in order to prevent or abate violations of this chapter.

Secs. 18.5-9—18.5-19. - Reserved.

ARTICLE II. - STORMWATER MANAGEMENT UTILITY FEES

Sec. 18.5-20. - Created.

A stormwater management utility fee, also referred to hereinafter as "fee," is hereby created and imposed on all developed property within the town for services and facilities provided by the stormwater management program. For the purpose of imposing the fee, all developed property within the town shall be classified as residential property.

Sec. 18.5-21. - Schedule of rates.

(a) The fee for "residential property" ~~is the rate of $7.50 per month multiplied by the number of dwelling units, hotel or motel units and/or business units existing on the property.(b)Public rights-of-way and other public properties are exempt from the fee~~ shall be set by the board of commissioners by resolution from time to time.

Sec. 18.5-22. - Billing, payment, penalties and enforcement.

(a)Bills for stormwater service shall be rendered bimonthly by ~~the~~ Pinellas County ~~Water System~~ Utilities as agent for the town. The fixed monthly charge shall take effect ~~October 1, 1995~~ as provided by resolution.

(b) If any bills shall not be paid ~~within seven days after the date it has been declared delinquent,~~ in accordance with the policies and practices of Pinellas County Utilities, ~~water service to the premises shall be disconnected until such delinquent account is paid in full, including all applicable disconnection and reconnection charges~~ enforcement shall occur in accordance with the policies and practices of Pinellas County Utilities.

(c) Statements for the stormwater management utility fee shall be ~~payable at the same time and in the same manner and subject to the same penalties as are otherwise set forth for the utility fees administered by the town. The property owner or fee payer will be notified of any delinquency in the payment of the stormwater management utility fee in the same manner that they are notified for delinquent water, garbage and sewer bills. Failure to pay such fee as is otherwise provided in the statement rendered to the payer shall subject the property to the discontinuance of water, garbage and sewer services and shall subject the fee payer to all other penalties and charges provided relative to the discontinuance of such utility services~~ processed in accordance with the policies and practices of Pinellas County Utilities.

Secs. 18.5-23—18.5-29. - Reserved.

ARTICLE III. - STORMWATER UTILITY FUND

Sec. 18.5-30. - Created.

There ~~shall be~~ is established a stormwater management utility fund for the deposit of all fees collected pursuant to this chapter. The fund will be used exclusively to provide services and facilities related to the stormwater management program. The funds shall be used only for the following expenditures and shall be held as trust funds of the town.

(1) Operation and maintenance of stormwater management facilities under the jurisdiction of the town;
(2) Costs for the evaluation, design, construction management, and construction of major and minor structural improvements of the stormwater management infrastructure;
(3) Administrative costs related to the management of the stormwater program;
(4) Management services such as permit review and planning and development review related to the stormwater management program; and
(5) Debt service financing of capital improvements related to the stormwater management program in accordance with F.S. §§ 403.0891 and 403.0893.

AGENDA ITEM 7e.
Ordinance 2020-03

LTAENGINEERS-LLC

Meeting Date December 8, 2020
Advertised Public Hearing
Agenda Item 7.e.

December 5, 2020

MEMORANDUM

TO: Town of Redington Beach Planning Board

FROM: Sarah Propst, AICP, PMP, LTA Engineers

SUBJECT: Proposed Ordinance 2020-03: Adoption of Town Standard Details Manual

EXECUTIVE SUMMARY

In February of 2020, the Town of Redington Beach Board of Commissioners adopted Ordinance 2019-10, increasing the allowable impervious surface ratio in the Comprehensive Plan. This amendment included Policy 2.1.2 which stated "The Town shall adopt, implement and maintain a Standard Details Manual to supplement the Pinellas County Stormwater Manual in order to provide guidance and criteria to the design and building community for best management practices unique to the Town's character." Proposed Ordinance 2020-03 fulfills that Comprehensive Plan requirement. **STAFF RECOMMENDS THAT THE PLANNING BOARD FIND ORDINANCE 2020-03 INTERNALLY CONSISTENT WITH THE BALANCE OF THE TOWN'S COMPREHENSIVE PLAN AND RECOMMEND ITS APPROVAL TO THE TOWN BOARD.**

BACKGROUND

Applicant: Town of Redington Beach

Affected Area: Entire Town

THE ISSUE

To come into compliance with the Town's Comprehensive Plan, a Town Standard Details Manual must be adopted.

HISTORY

In 2019 the Town of Redington Beach recognized there had been an error in the adoption of an impervious surface coverage ratio. An ordinance had been adopted without an update to the Comprehensive Plan. This was resolved by the adoption of Ordinance 2019-10 and a Comprehensive Plan update.

One of the concerns in adopting an increased allowable impervious surface was that additional stormwater would be created. The comprehensive plan included several requirements in Policy 2.1.2 that would ameliorate the increased stormwater generated by additional impervious surface and one of those solutions was to adopt a Town Standard Details Manual. Adoption of the manual ensures that all

development applicants have access to best management practices and designs that meet the specifications of the Town.

Policy 2.1.2. of the Comprehensive Plan follows (all language underlined was added to the Comprehensive Plan by Ordinance 2019-10):

Ensure that the developer or owner of any new development or redevelopment site is responsible for the on-site management of stormwater runoff so that post-development runoff rates, volumes, and pollutant loads do not exceed predevelopment conditions. The land development regulations implementing this Policy shall:

1. reaffirm the Building Official's authority to enforce this Policy;
2. provide that the Building Official may confer with engineers and with professionals in other relevant fields to provide comprehensive review and approval of drainange plans and specifications for any project that increases the impervious surface ratio on the subject property.
3. The drainage design, construction and inspection requirements shall be consistent with the Town's land development regulations, and with the Pinellas County Stormwater Manual (February 1, 2017).
4. More generally, the goals of stormwater management are to minimize the adverse effects of urban development on communities, watersheds, water bodies, wetlands, floodplains and other natural systems. These goals should be applied to redevelopment situations so that existing stormwater conditions are appropriately improved with reconstruction. More specifically, these goals include:
   a. Reducing pollutant concentrations and loadings to a level to ensure that discharges do not cause or contribute to violations of State water quality standards.
   b. Preventing or reducing on-site and off-site flooding.
   c. Maintaining or restoring the hydrologic integrity of wetlands and aquatic habitats.
   d. Maintaining and promoting groundwater recharge.
   e. Promoting the reuse of rainfall and stormwater.
   f. Minimizing erosion and sedimentation.
   g. Accounting for impacts to the project based on sea level rise projections.
5. The Town shall adopt, implement and maintain a Standard Details Manual to supplement the Pinellas County Stormwater Manual in order to provide guidance and criteria to the design and building community for best management practices unique to the Town's character.

NOTICE

The Clerk's office will advise as to the notice given of this advertised public hearing.

ANALYSIS

The Town of Redington Beach has adopted a maximum impervious surface ratio of 65% for residential lots and 85% for nonresidential lots. The attached Town Standard Details Manual (Exhibit A) and the existing Pinellas County Stormwater Manual (Exhibit A-1) were developed to accommodate the stormwater runoff that will result from higher impervious surface percentages. Adoption of Town Standard Details will ensure that all new development and redevelopment is designed to accommodate stormwater that will be generated on site and that infrastructure is developed for safety and functionality.

The attached Town Standard Details include specifications for many types of infrastructure found in the town: driveways, drainage structures, sidewalks, roadways, Wastop valves and lot drainage designs. The adoption of acceptable standard details is a benefit to the Town and to residents and developers in several ways. The standard details will allow residents to do work on their property without having an engineer design each component. The homeowner will be able to rely on the details to know, for instance, what the radius of the drive will need to be or how to accommodate the swale along the right of way.

Standard details will provide acceptable, engineered solutions to common infrastructure needs in the Town. This saves time and money for residents and developers and it saves the Town time and money for staff reviews. When an applicant submits a plan and uses the Town Standard Detail, the Town can feel secure in the knowledge that the engineering is correct and will work as long as it is implemented as designed.

RECOMMENDATION

THAT THE PLANNING BOARD FIND PROPOSED ORDINANCE 2020-03 TO BE INTERNALLY CONSISTENT WITH THE BALANCE OF THE TOWN'S COMPREHENSIVE PLAN AND RECOMMEND TO THE TOWN BOARD APPROVAL OF THE ORDINANCE.

ATTACHMENTS:
EXHIBIT A – TOWN STANDARD DETAILS MANUAL
EXHBIT A-1 – EXCERPT FROM PINELLAS COUNTY STORMWATER MANUAL
EXHIBIT B – ORDINANCE 2020-03

EXHIBIT A

TOWN OF REDINGTON BEACH

TOWN STANDARD DETAILS MANUAL

February 24, 2020

SUBSTANTIAL EFFORT HAS BEEN MADE TO ENSURE THE INFORMATION CONTAINED IN THESE STANDARDS IS ACCURATE. HOWEVER, THE TOWN OF REDINGTON BEACH CANNOT ACCEPT RESPONSIBILITY FOR ANY ERRORS OR OVERSIGHTS IN THE USE OF THE MATERIAL OR IN THE PREPARATION OF THE ENGINEERING PLANS. THIS PUBLICATION IS INTENDED FOR USE BY PROFESSIONAL PERSONNEL COMPETENT TO EVALUATE THE SIGNIFICANCE AND LIMITATIONS OF ITS CONTENTS AND BE ABLE TO ACCEPT RESPONSIBILITY FOR THE APPLICATION OF THE MATERIAL IT CONTAINS.

THE DESIGNER MUST RECOGNIZE THAT NO HANDBOOK OR CODE CAN SUBSTITUTE FOR EXPERIENCED ENGINEERING JUDGEMENT. SOME OF THE RECOMMENDATIONS ARE UNDER FURTHER REVIEW AND MAY BE UPDATED LATER. USERS OF THESE STANDARDS ARE ENCOURAGED TO OFFER COMMENTS TO TOWN OF REDINGTON BEACH PUBLIC WORKS DEPT ON THE CONTENTS OF THIS PUBLICATION AND SUGGESTIONS FOR CHANGES IN FUTURE EDITIONS.

THESE STANDARDS ARE UNDER CONSTANT REVIEW AND ARE SUBJECT TO CHANGES APPROVED BY THE TOWN BUILDING OFFICIAL. THE TOWN BUILDING OFFICIAL SHALL INTERPRET THESE STANDARDS, AS NEEDED, FOR APPLICATION AND RESOLUTION OF CONFLICTS.

NOTE: ALL CONSTRUCTION AND STANDARDS REFERENCED WITHIN

SHALL MEET OR EXCEED F.D.O.T. ROADWAY AND TRAFFIC DESIGN STANDARDS (LATEST REVISION) AND F.D.O.T. STANDARD SPECIFICATIONS FOR ROAD AND BRIDGE CONSTRUCTION (LATEST REVISION), UNLESS OTHERWISE NOTED.

GENERAL INDEX

SECTION		SHEET NO. SERIES
100	DRIVEWAYS	100.0
200	CURB & GUTTER, DRAINAGE STRUCTURES, PIPE	200.0
300	SIDEWALKS	300.0
400	ROADS	400.0
500	TRAFFIC SUPPLEMENTAL SPECIFICATIONS	500.0
600	WASTOP VALVE INSTALLATION SPECIFICATIONS	600.0
700	LOT DRAINAGE SPECIFICATIONS	700.0
800	RESERVED	800.0

DRIVEWAYS INDEX

	SHEET NO.
100 DRIVEWAYS	100.0
A. RESIDENTIAL DRIVEWAY - SWALE	101.0
B. RESIDENTIAL DRIVEWAY - CURB	101.1
C. CURB CUT & TRANSITION W/T-FLARE FOR RESIDENTIAL DRIVEWAY	101.2
D. COMMERCIAL & INDUSTRIAL DRIVEWAY	101.3
E. TYPICAL DRIVEWAY, PIPE CROSS SECTION	102.0
F. MITERED END SECT. FOR ELIPTICAL, SINGLE AND MULTIPLE PIPES	102.1
G. MITERED END SECT. FOR ROUND, SINGLE AND MULTIPLE PIPES	102.2
H. DRIVEWAY PIPE/MITERED END SECTION	103.0
I. FILTER FABRIC JACKET	104.0
J. PERVIOUS/PERMEABLE DRIVEWAY OPTIONS WITHIN CITY RIGHTS OF WAY	105.0

TOWN OF REDINGTON BEACH			DRIVEWAY INDEX	100.0
REV.BY	DATE			
		DATE OF APPROVAL		

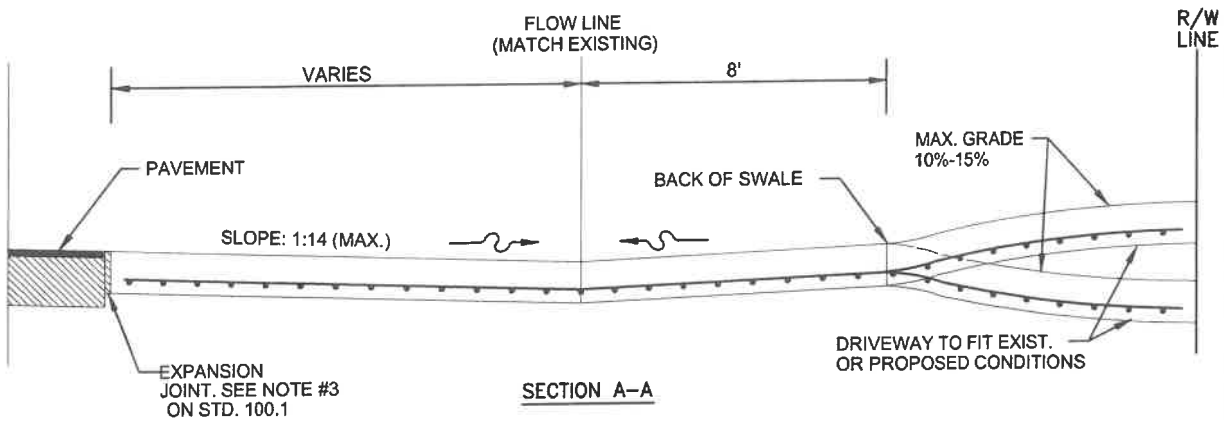

SECTION A–A

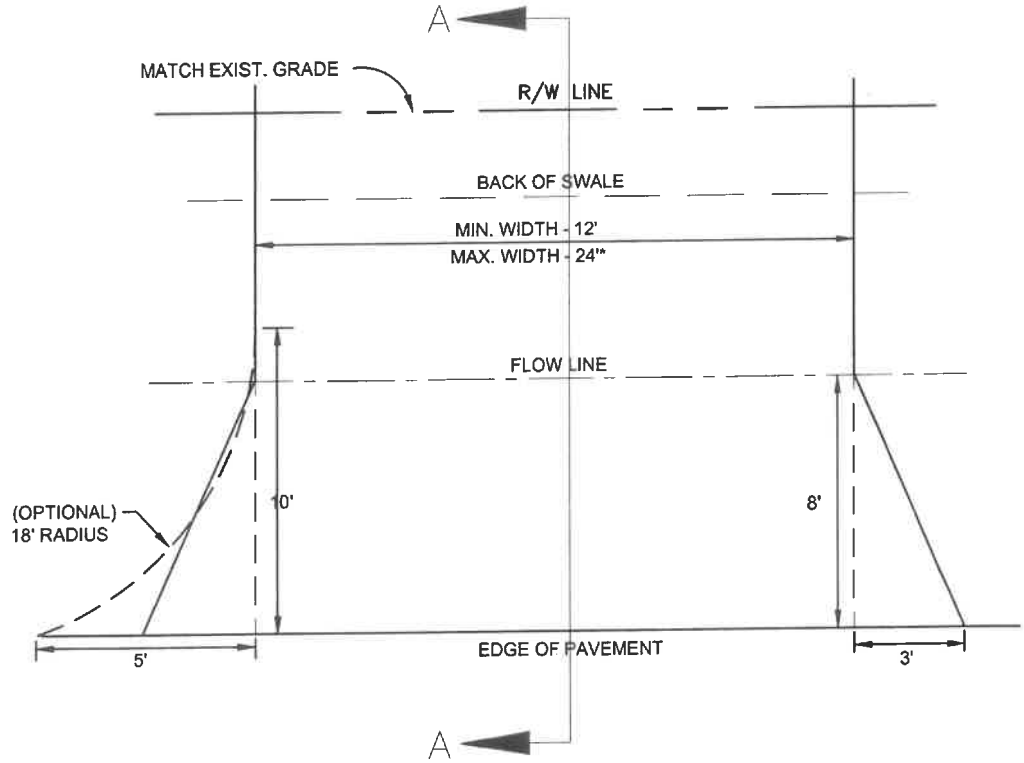

PLAN VIEW

* For driveways that can demonstrate the need for additional width, the width may not be greater than the LESSER of:

a.) 30' total at the R/W line

b.) 30% of the front footage as defined on the survey (or field measurements, 36' max,)

(A) CONSTRUCT WITH 6" REINFORCED CONCRETE (3,00O psi @ 28 DAYS) WITH 6"x6" #10 MESH OR FIBERMESH FROM EDGE OF PAVEMENT TO THE RIGHT-OF-WAY LINE.

(B) DRIVEWAYS ADJACENT TO A PAVED ROADWAY MUST HAVE THE APRON CONSTRUCTED IN COMPLIANCE WITH THE NOTE (A) ABOVE.

(C) EXISTING DRAINAGE FLOWLINE TO BE MAINTAINED. PIPING MAY BE REQUIRED AT THE COUNTY'S DISCRETION.

(D) 3'x8' FLARED APRON IS MINIMAL, OR 18' RADIUS.

(E) TOWN ENGINEER A=OR SUPERINTENDENT OF PUBLIC WORKS MAY APPROVE THE USE OF A SWALE DRIVE, IF ON-SITE CONDITIONS ARE FAVORABLE.

TOWN OF REDINGTON BEACH			RESIDENTIAL (SWALE DRIVE)	101.0
REV.BY	DATE			
		DATE OF APPROVAL		

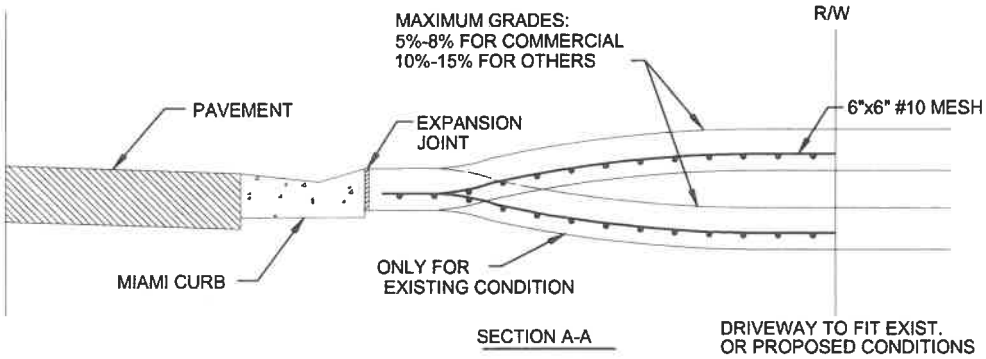

SECTION A-A

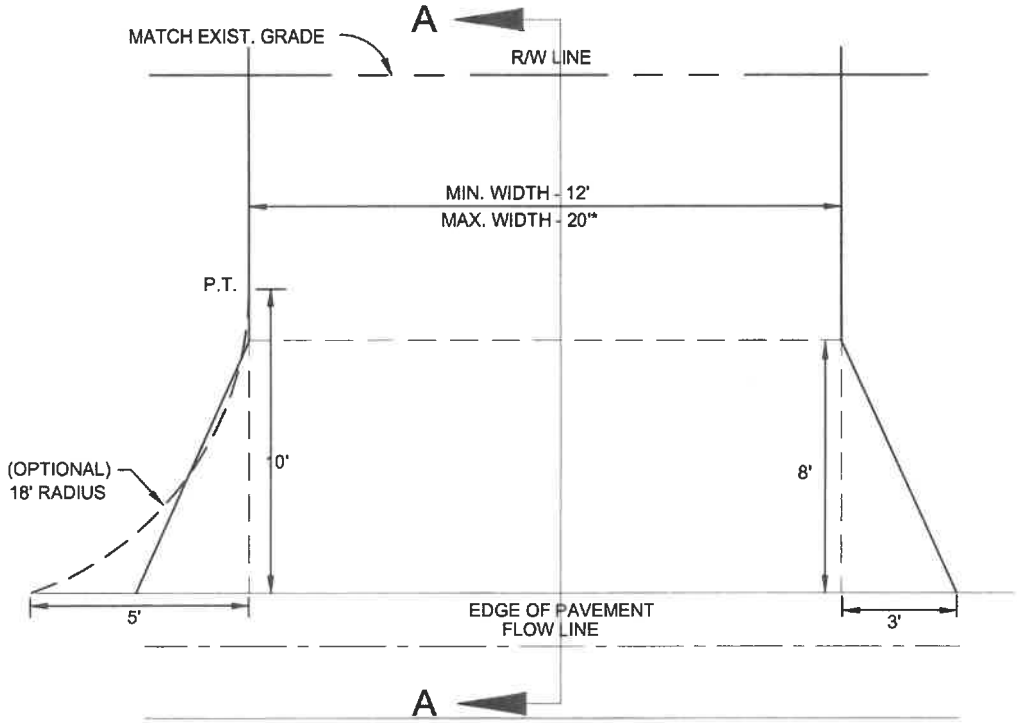

PLAN VIEW

* For driveways that can demonstrate the need for additional width, the width may not be greater than the LESSER of:

a.) 30' total at the R/W line

b.) 30% of the front footage as defined on the survey (or field measurement, 36' max.)

* OR AS OTHERWISE DETERMINED BY LDC. SECTION 8.15.B.3.b

(A) CONSTRUCT WITH 6" REINFORCED CONCRETE 3000 PSI @ 28 DAYS, 6"x6" #10 WIRE MESH FROM BACK OF CURB- TO R/W LINE.

(B) DRIVEWAYS ADJACENT TO A PAVED ROADWAY MUST HAVE THE APRON CONSTRUCTED IN COMPLIANCE WITH THE NOTE (A) ON PREVIOUS PAGE (STD. 101.0)

(C) MAINTAIN EXISTING DRAINAGE FLOWLINE. FOR PIPING SPECIFICATIONS REFER TO F.D.O.T. STANDARD SPECIFICATIONS SECTION 430. SEE NOTE 4, PAGE 100.1. SEE SECTION 200- DRAINAGE (STD. 200.0, 202.5).

(D) 3'x8' FLARE OR 18' RADIUS WITH CURB TRANSITION (TRANSITION FROM TYPE "F" CURB TO MIAMI CURB) SEE STD. 102.2 NO CHANGE WITH 3' VALLEY CROSSINGS - SEE STDS. 201.0, 201.1, 201.2, 201.4, 201.5, 201.6.

(E) EXPANSION JOINT 0.50" PREFORMED JOINT FILLER OR APPROVED ALTERNATE, DRIVES WIDER THAN 12' (BEYOND FLARE) PLACE JOINT ON 10' CENTER.

(F) LATERAL ALIGNMENT 45 DEGREES FOR DOUBLE DRIVE PER LOT, 90 DEGREES FOR SINGLE DRIVE, OFF CENTER LINE.

TOWN OF REDINGTON BEACH			RESIDENTIAL (CURB DRIVE)	101.1
REV.BY	DATE			
		DATE OF APPROVAL		

TYPE "F" CURB For * driveways that can demonstrate the need for additional width, the width may not be greater than the LESSER of:

a.) 30' total at the R/W line

b.) 30% of the front footage as defined on the survey (or field measurements)

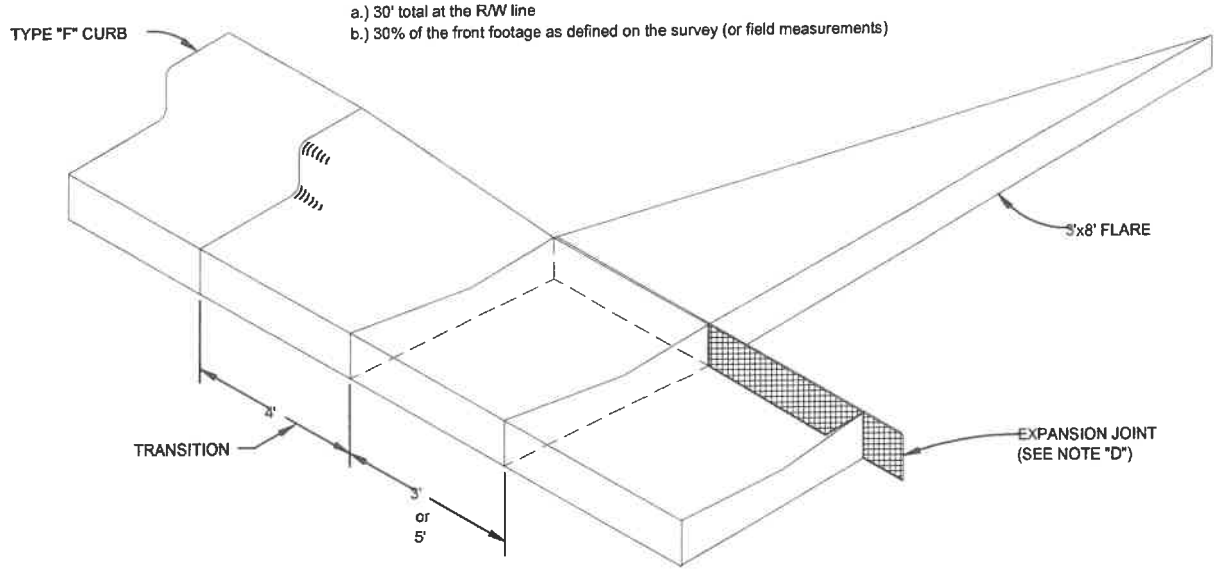

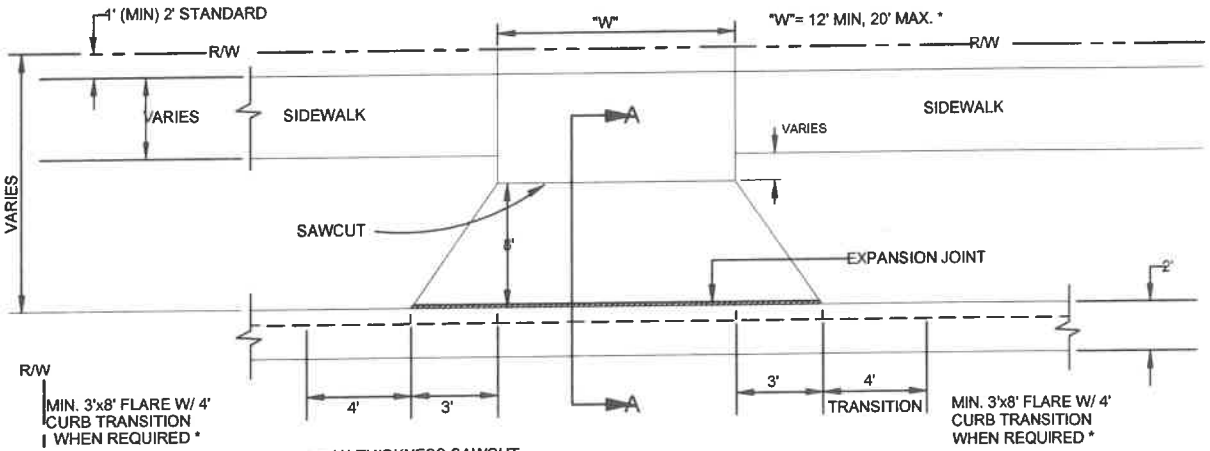

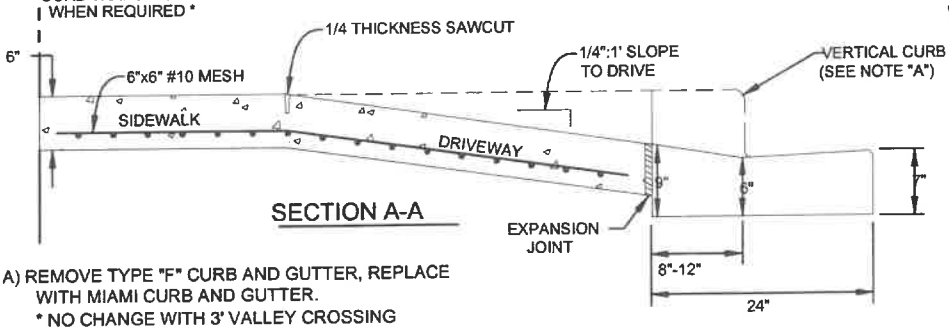

A) REMOVE TYPE "F" CURB AND GUTTER, REPLACE WITH MIAMI CURB AND GUTTER.
* NO CHANGE WITH 3' VALLEY CROSSING

B) REMOVE EXISTING SIDEWALK, REPLACE WITH 6" CONCRETE, 6"x6" #10 MESH 3000 PSI AT 28 DAYS.

* OR AS DETERMINED BY LDC. SECTION 8.15B3b

C) DRIVEWAY CONSTRUCTED WITH 6" CONCRETE WITH 6"x6" #10 MESH OR FIBERMESH, 3000 PSI AT 28 DAYS

D) EXPANSION JOINT 1/2" PREFORMED JOINT FILLER PER FDOT SECTION 932-1.1 OR APPROVED ALTERNATE

E) 5' SIDEWALK ON LOCAL STREETS, 5' SIDEWALK ON THOROUGHFARES. MIXED USE PATHS MAY REQUIRE 8' SIDEWALKS PER LAND DEVELOPMENT CODE.

F) SAWCUT (1/4 THICKNESS MINIMUM) ON 10' CENTERS. IF DRIVE IS WIDER THAN 12', ADD JOINTS AT 10' CENTERS.

TOWN OF REDINGTON BEACH	CURB CUT & TRANSITION W/ T-FLARE FOR RESIDENTIAL DRIVES	101.2
REV.BY / DATE		
DATE OF APPROVAL		

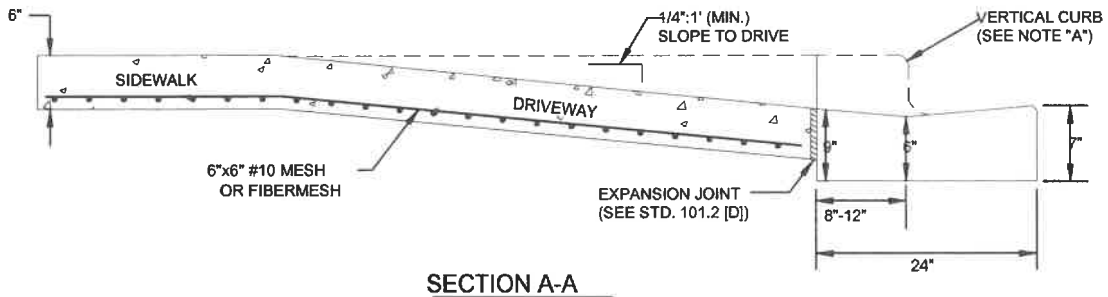

SECTION A-A

NOTE: WIDTH PER LDC. SECTION 8.15B3b

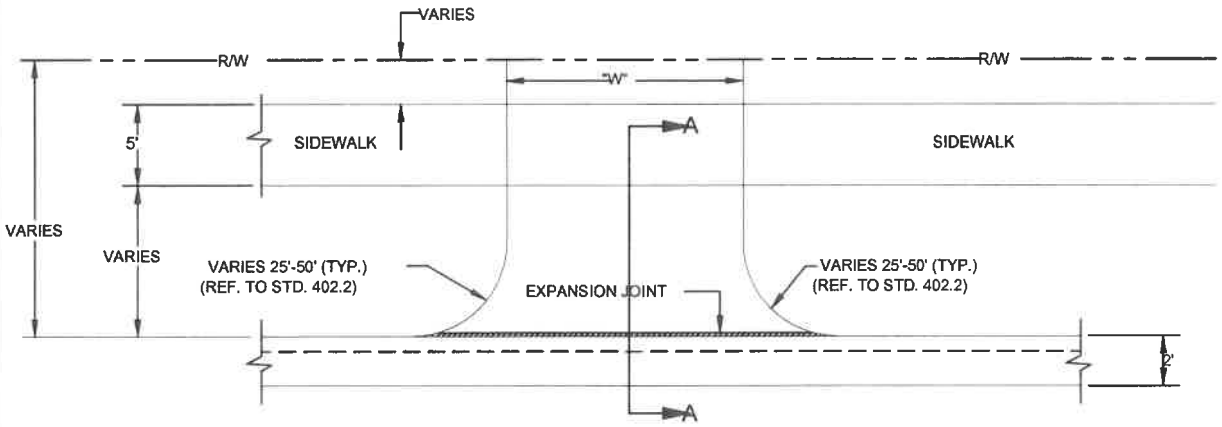

PLAN VIEW

A) IF REPLACING VERTICAL CURB AND GUTTER, REPLACE WITH MIAMI CURB AND GUTTER.
* NO CHANGE WITH 3' VALLEY CROSSING

B) SIDEWALK. CONSTRUCT WITH 6" CONCRETE, 6"X6" #10 MESH OR FIBERMESH, 3000 PSI AT 28 DAYS.

C) DRIVEWAY CONSTRUCTED WITH 6" CONCRETE WITH 6"X6" #10 MESH OR FIBERMESH, 3000 PSI AT 28 DAYS.

D) EXPANSION JOINT 1/2" PREFORMED JOINT FILLER PER FDOT SECTION 932-1.1 OR APPROVED ALTERNATE.
* IF DRIVE IS WIDER THAN 12', ADD JOINTS AT 10' CENTERS

E) 5' SIDEWALK ON LOCAL STREETS, 5' SIDEWALK ON THOROUGHFARES.
(MIXED USE PATHS MAY REQUIRE 8' SIDEWALKS PER LAND DEVELOPMENT CODE.)

TOWN OF REDINGTON BEACH			COMMERCIAL & INDUSTRIAL DRIVE	101.3
REV.BY	DATE			
		DATE OF APPROVAL		

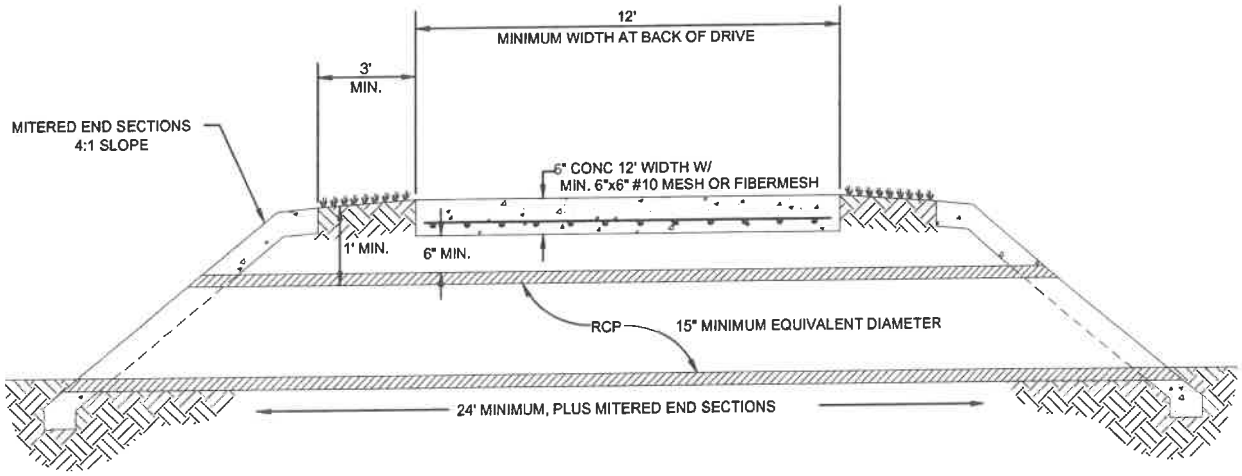

TYPICAL DRIVEWAY

VARIABLES: C.M.P. WILL NOT BE ALLOWED WITHIN THE RIGHT-OF-WAY.
R.C.P. WILL REQUIRE A MINIMUM 6" OF COVER BENEATH BOTTOM OF DRIVEWAY, FOR A TOTAL OF 1' OF COVER. HDPE PIPE IS ACCEPTABLE IN LIEU OF RCP.
ALTERNATIVE DRIVEWAY MATERIALS MAY BE UTILIZED IN ACCORDANCE WITH THESE STANDARDS.

NOTE: 1) GRADES AND LOCATIONS MUST BE REVIEWED AND APPROVED BY PUBLIC WORKS FOR ALL PIPE INSTALLATIONS

2) ACTUAL REQUIRED PIPE DIAMETER WILL BE BASED ON THE FLOW RATE REQUIRED TO PASS THROUGH PIPE SO AS NOT TO IMPOUND WATER UPSTREAM.

3) PIPE SIZE TO BE DETERMINED AND APPROVED BY PUBLIC WORKS.

TOWN OF REDINGTON BEACH			TYPICAL DRIVEWAY PIPE CROSS SECTION	102.0
REV.BY	DATE			
		DATE OF APPROVAL		

ELIPTICAL PIPE

DIMENSIONS & QUANTITIES

	Rise R	Span S	X	A	B	C	E	F	G	M Single Pipe	M Double Pipe	M Triple Pipe	M Quad. Pipe
2:1 Slope	12"	18"	2'-10"	1.97'	1.62'	3.59'	1.56'	4'	1.50'	4.92'	7.75'	10.58'	13.42'
	14"	23"	3'-4"	2.01'	1.99'	4.00'	1.89'	5'	1.90'	5.38'	8.71'	12.04'	15.38'
	19"	30"	4'-0"	2.11'	2.92'	5.03'	2.73'	6'	2.37'	6.04'	10.04'	14.04'	18.04'
	24"	38"	5'-0"	2.20'	3.85'	6.05'	3.56'	7'	2.85'	6.79'	11.79'	16.79'	21.79'
	29"	45"	5'-11"	2.34'	4.79'	7.13'	4.39'	8'	3.19'	7.50'	13.42'	19.33'	25.25'
	34"	53"	7'-0"	2.43'	5.72'	8.15'	5.23'	9'	3.57'	8.25'	15.25'	22.25'	29.25'
	38"	60"	7'-10"	2.52'	6.46'	8.98'	5.89'	9'	3.95'	8.92'	16.75'	24.58'	32.42'
	43"	68"	8'-11"	2.62'	7.39'	10.01'	6.73'	10'	4.28'	9.67'	18.58'	27.50'	36.42'
	48"	76"	9'-11"	2.71'	8.33'	11.04'	7.56'	11'	4.59'	10.42'	20.33'	30.25'	40.17'
	53"	83"	10'-8"	2.80'	9.26'	12.06'	8.39'	12'	4.77'	11.08'	21.75'	32.42'	43.08'
	58"	91"	11'-8"	2.90'	10.19'	13.09'	9.23'	13'	5.01'	11.83'	23.50'	35.17'	46.83'
4:1 Slope	12"	18"	2'-10"	2.36'	3.06'	5.42'	3.03'	5'	1.50'	4.92'	7.75'	10.58'	13.42'
	14"	23"	3'-4"	2.44'	3.75'	6.19'	3.70'	6'	1.90'	5.38'	8.71'	12.04'	15.38'
	19"	30"	4'-0"	2.62'	5.47'	8.09'	5.36	8'	2.37'	6.04'	10.04'	14.04'	18.04'
	24"	38"	5'-0"	2.79'	7.18'	9.97'	7.03'	10'	2.85'	6.79'	11.79'	16.79'	21.79'
	29"	45"	5'-11"	3.05'	8.90'	11.95'	8.70'	12'	3.19'	7.50'	13.42'	19.33'	25.25'
	34"	53"	7'-0"	3.22'	10.62'	13.84'	10.36'	13'	3.57'	8.25'	15.25'	22.25'	29.25'
	38"	60"	7'-10"	3.39'	11.99'	15.38'	11.70'	15'	3.95'	8.92'	16.75'	24.58'	32.42'
	43"	68"	8'-11"	3.56'	13.71'	17.27'	13.36'	17'	4.28'	9.67'	18.58'	27.50'	36.42'
	48"	76"	9'-11"	3.73'	15.43'	19.16'	15.03'	19'	4.59'	10.42'	20.33'	30.25'	40.17'
	53"	83"	10'-8"	3.91'	17.15'	21.06'	16.70'	20'	4.77'	11.08'	21.75'	32.42'	43.08'
	58"	91"	11'-8"	4.08'	18.87'	22.95'	18.36'	22'	5.01'	11.83'	23.50'	35.17'	46.83'

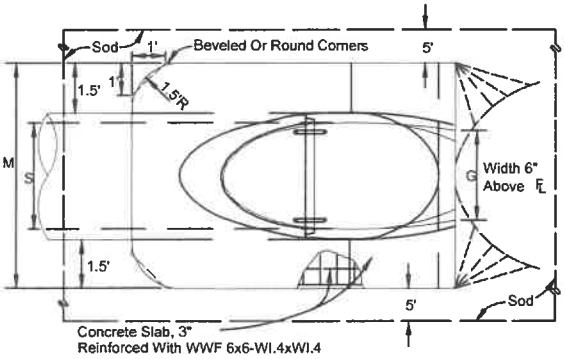

TOP VIEW-SINGLE PIPE

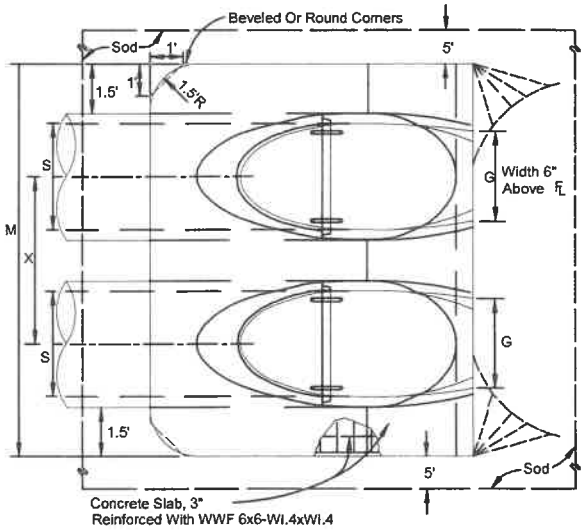

TOP VIEW-MULTIPLE PIPE

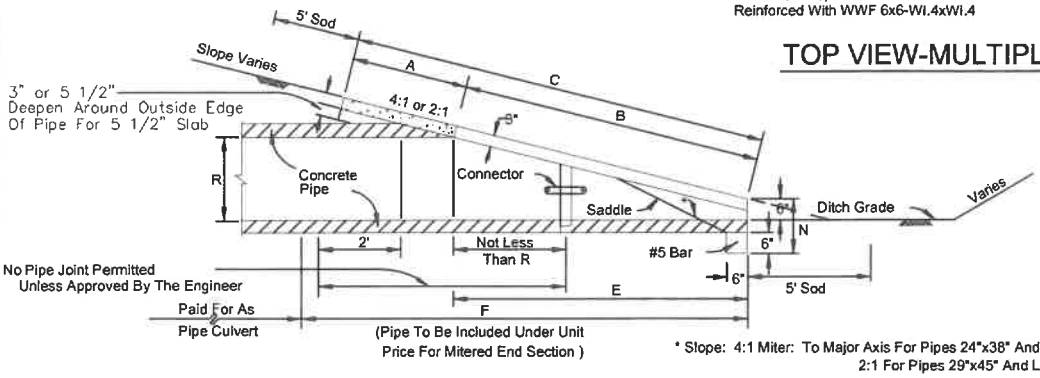

SECTION

* Slope: 4:1 Miter: To Major Axis For Pipes 24"x38" And Smaller.
2:1 For Pipes 29"x45" And Larger.

2:1 Miter: To Major Axis For Pipes 29"x45" And Smaller.
1:1 For Pipes 34"x53" And Larger.

TOWN OF REDINGTON BEACH			MITERED END SECTION FOR ELIPTICAL, SINGLE, AND MULTIPLE PIPES	102.1
REV.BY	DATE			
		DATE OF APPROVAL		

ROUND PIPE

	DIMENSIONS AND QUANTITIES											
									M			
	D	X	A	B	C	E	F	G	Single Pipe	Double Pipe	Triple Pipe	Quad. Pipe
2:1 Slope	15"	2'-7"	1.92'	2.18'	4.10'	2.06'	5'	1.22'	4.63'	7.21'	9.79'	12.37'
	18"	2'-10"	1.97'	2.74'	4.71'	2.56'	6'	1.41'	4.92'	7.75'	10.58'	13.42'
	24"	3'-5"	2.06'	3.85'	5.91'	3.56'	7'	1.73'	5.50'	8.92'	12.33'	15.75'
	30"	4'-3"	2.15'	4.95'	7.10'	4.56'	8'	2.00'	6.08'	10.33'	14.58'	18.83'
	36"	5'-1"	2.25'	6.08'	8.33'	5.56'	9'	2.24'	6.67'	11.75'	16.83'	21.92'
	42"	6'-0"	2.34'	7.21'	9.55'	6.56'	10'	2.45'	7.25'	13.25'	19.25'	25.25'
	48"	6'-9"	2.43'	8.33'	10.76'	7.56'	11'	2.65'	7.83'	14.58'	21.33'	28.08'
	54"	7'-8"	2.52'	9.44'	11.96'	8.56'	12'	2.83'	8.42'	16.08'	23.75'	31.42'
	60"	8'-6"	2.62'	10.56'	13.18'	9.56'	14'	3.00'	9.00'	17.50'	26.00'	34.50'
	66"	9'-2"	2.71'	11.68'	14.39'	10.56'	15'	3.18'	9.58'	18.75'	27.92'	37.08'
	72"	10'-0"	2.80'	12.80'	15.60'	11.56'	16'	3.30'	10.16'	20.16'	30.16'	40.16'
4:1 Slope	15"	2'-7"	2.27'	4.09'	6.36'	4.03'	8'	1.22'	4.63'	7.21'	9.79'	12.37'
	18"	2'-10"	2.36'	5.12'	7.48'	5.03'	9'	1.41'	4.92'	7.75'	10.58'	13.42'
	24"	3'-5"	2.53'	7.18' △	9.71'	7.03' △	11'	1.73'	5.50'	8.92'	12.33'	15.75'
	30"	4'-3"	2.70'	9.25'	11.95'	9.03'	13'	2.00'	6.08'	10.33'	14.58'	18.83'
	36"	5'-1"	2.87'	11.31' ◇	14.18'	11.03' ◇	15'	2.24'	6.67'	11.75'	16.83'	21.92'
	42"	6'-0"	3.05'	13.37'	16.42'	13.03'	17'	2.45'	7.25'	13.25'	19.25'	25.25'
	48"	6'-9"	3.22'	15.43'	18.65'	15.03'	19'	2.65'	7.83'	14.58'	21.33'	28.08'
	54"	7'-8"	3.39'	17.49'	20.88'	17.03'	21'	2.83'	8.42'	16.08'	23.75'	31.42'
	60"	8'-6"	3.56'	19.55'	23.11'	19.03'	23'	3.00'	9.00'	17.50'	26.00'	34.50'
	66"	9'-2"	3.73'	21.62'	25.35'	21.03'	25'	3.18'	9.58'	18.75'	27.92'	37.08'
	72"	10'-0"	3.91'	22.68'	26.59'	23.03'	27'	3.30'	10.16'	20.16'	30.16'	40.16'

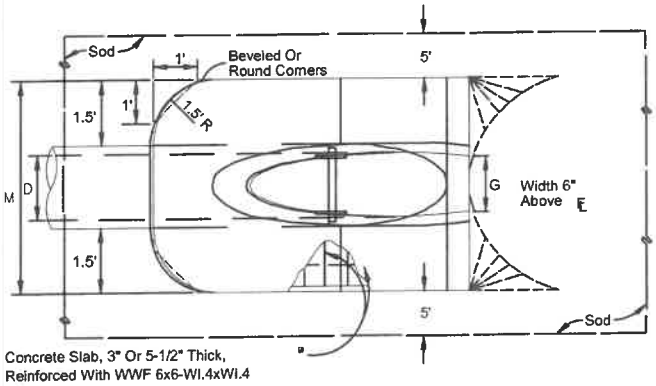

Concrete Slab, 3" Or 5-1/2" Thick,
Reinforced With WWF 6x6-WI.4xWI.4

TOP VIEW-SINGLE PIPE

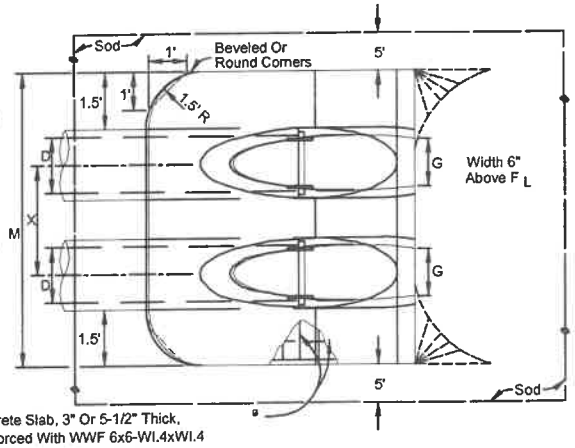

Concrete Slab, 3" Or 5-1/2" Thick,
Reinforced With WWF 6x6-WI.4xWI.4

TOP VIEW-MULTIPLE PIPE

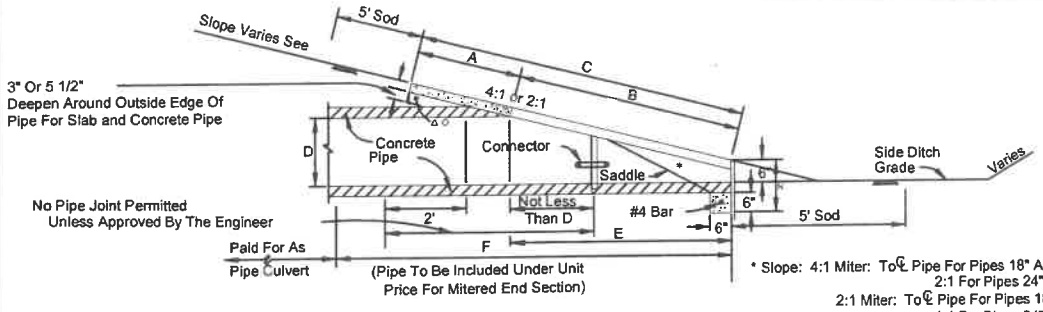

* Slope: 4:1 Miter: To ℄ Pipe For Pipes 18" And Smaller.
2:1 For Pipes 24" And Larger.
2:1 Miter: To ℄ Pipe For Pipes 18" And Smaller.
1:1 For Pipes 24" And Larger.

SECTION

TOWN OF REDINGTON BEACH	MITERED END SECTION FOR ROUND, SINGLE & MULTIPLE PIPES	102.2
REV.BY / DATE		
DATE OF APPROVAL		

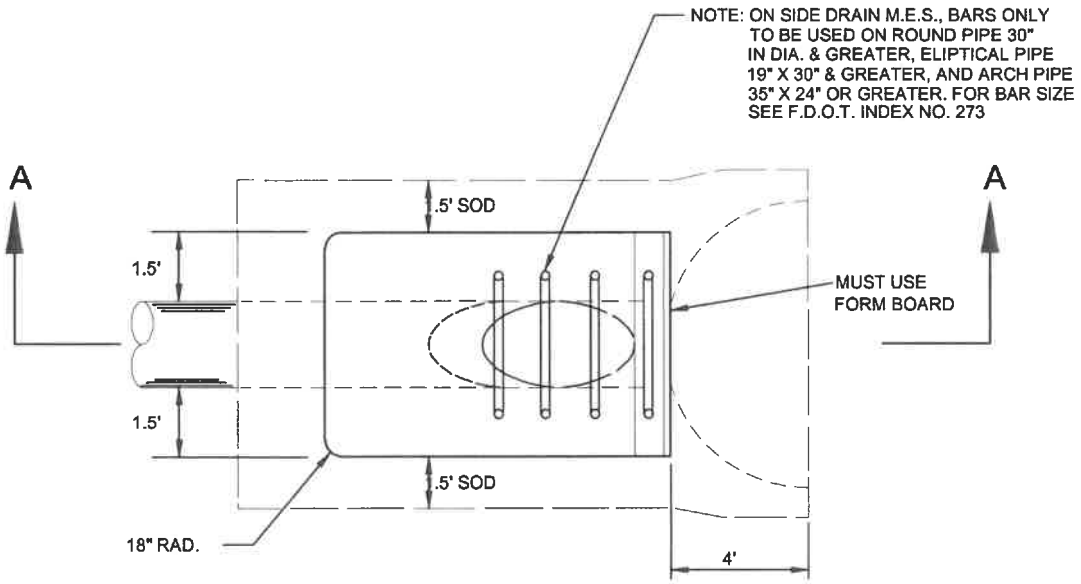

PLAN VIEW

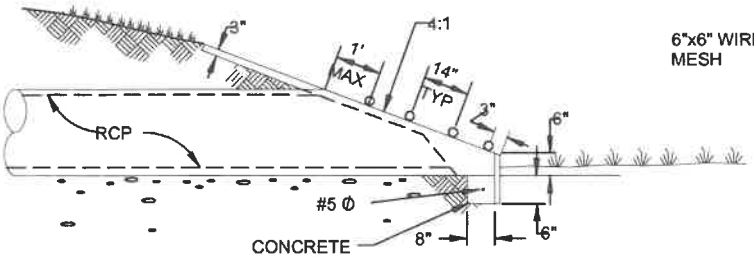

SECTION A-A

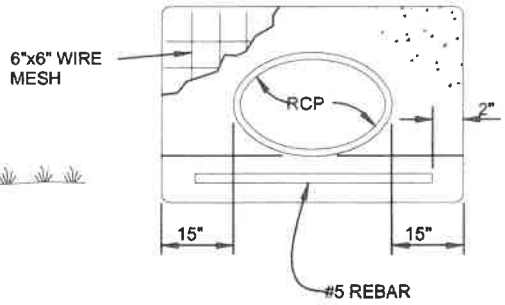

END VIEW

SOD TO BE PLACED 1.5 FT AROUND THE PERIMETER OF THE WALL, SOD TO BE BAHIA; ST. AUGUSTINE SOD WHERE THERE IS TIDAL, HEAVY CONCENTRATION OF SALT, OR SURROUNDING PROPERTY IS ST. AUGUSTINE.

TOWN OF REDINGTON BEACH			DRIVEWAY AND ROAD PIPE MITERED END SECTION	103.0
REV.BY	DATE			
		DATE OF APPROVAL		

NOTE: FILTER FABRIC NOT REQUIRED WHEN AN O-RING GASKET IS USED.

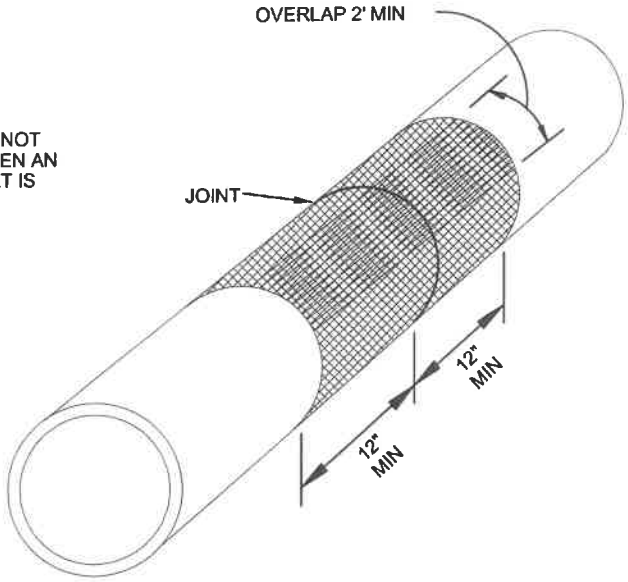

ISOMETRIC VIEW

NOTE: FILTER FABRIC MATERIAL MUST MEET THE FOLLOWING ASTM REQUIREMENTS:

ASTM D 4595
ASTM D 4632
ASTM D 4533
ASTM D 4833
ASTM D 4491

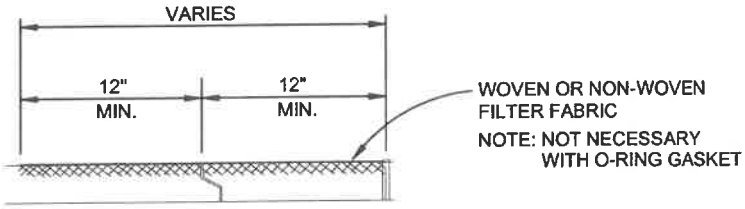

BUTT JOINT

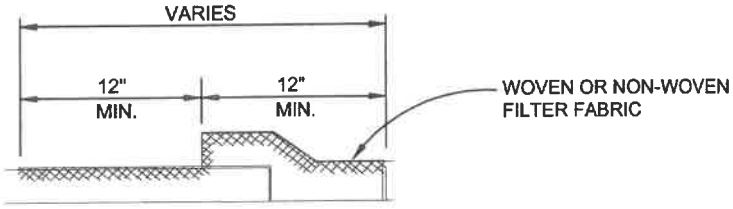

BELL JOINT

TOWN OF REDINGTON BEACH			FILTER FABRIC JACKET	104.0
REV.BY	DATE			
		DATE OF APPROVAL		

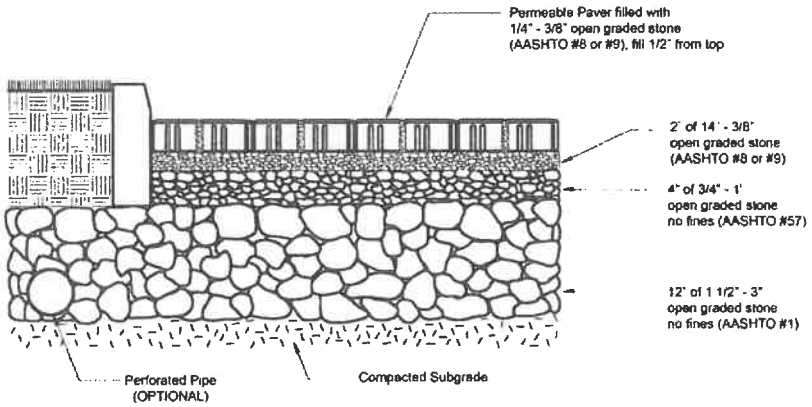

1. 6" POURED CONCRETE BOND BAND SHALL BE INSTALLED WHERE CURB IS NOT PRESENT WITH 3/4" REVEAL AT EDGE OF TRAVEL WAY.
2. 6" POURED CONCRETE BOND BAND SHALL BE INSTALLED ON ALL OUTSIDE EDGES WHERE NO EXISTING OR NEW SOLID STRUCTURE IS PRESENT TO HOLD PAVERS IN PLACE.
3. ALL PAVERS WITHIN TRAFFIC AREAS MUST BE TRAFFIC BEARING.
4. A RIGHT OF WAY USE PERMIT AND AN APPROVED LICENSE AGREEMENT MUST BE OBTAINED IF PAVERS ARE TO BE INSTALLED IN CITY RIGHT OF WAY.
5. PAVER INSTALLATION SPECIFICATIONS APPLY TO PUBLIC AND PRIVATE IMPROVEMENTS EXCEPT FOR NON-TRAFFIC BEARING SIDEWALKS CONSTRUCTED ENTIRELY ON PRIVATE PROPERTY.
6. DRIVEWAY REPAIRS DUE TO FUTURE RIGHT OF WAY UTILITY AND/OR ROAD WORK ARE THE FULL RESPONSIBILITY OF THE OWNER.

PERMEABLE PAVER INSTALLATION DETAIL

N.T.S.

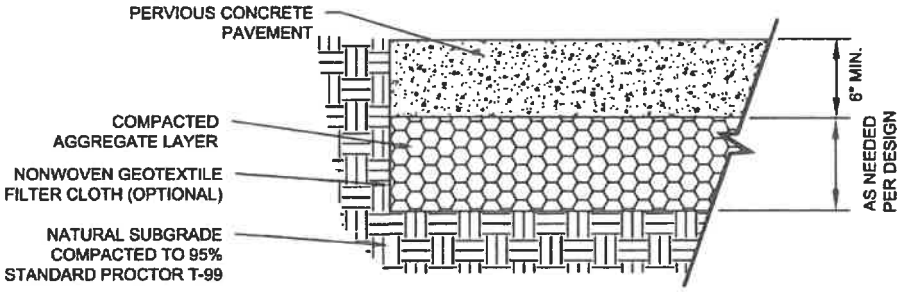

1. FOR USE IN PARKING AREAS AND LOW VOLUME ACCESSWAYS ONLY.
2. ENGINEER OF RECORD SHALL SUBMIT PERVIOUS PAVEMENT DESIGN AND SPECIFICATIONS BASED ON THE SITE SPECIFIC SOIL CONDITIONS, STORMWATER STORAGE REQUIREMENTS AND THE ANTICIPATED TRAFFIC LOADINGS.
3. PERVIOUS CONTRACTORS SHALL BE NRMCA CERTIFIED CRAFTSMEN.
4. PERVIOUS PRODUCER/SUPPLIERS AND TESTING FIRMS SHALL USE NRMCA CERTIFIED TECHNICIANS.
5. POROUS ASPHALT MAY BE USED AS AN ALTERNATIVE MATERIAL AS DESIGNED BY THE EOR.
6. A RIGHT OF WAY USE PERMIT AND AN APPROVED LICENSE AGREEMENT MUST BE OBTAINED.IF PAVERS ARE TO BE INSTALLED IN CITY RIGHT OF WAY.
7. DRIVEWAY REPAIRS DUE TO FUTURE RIGHT OF WAY UTILITY AND/OR ROAD WORK ARE THE FULL RESPONSIBILITY OF THE OWNER

PERVIOUS CONCRETE PAVEMENT DETAIL

N.T.S.

TOWN OF REDINGTON BEACH			PAVER AND PREVIOUS CONCRETE	105.0
REV.BY	DATE			
		DATE OF APPROVAL		

CURB & GUTTER AND DRAINAGE STRUCTURES & PIPE INDEX

	SHEET NO.
200 CURB & GUTTER, DRAINAGE	200.0
A. CURB & GUTTER (CONTROL SHEET)	201.0
1. TYPE "A" MIAMI CURB & GUTTER	201.1
2. TYPE "F"	201.2
3. MODIFIED TYPE "AB"	201.3
4. TYPE "D"	201.4
5. INVERTED CROWN GUTTER	201.5
6. VALLEY CROSSING	201.6
B. DRAINAGE (CONTROL SHEET)	202.0
1. TYPICAL CONCRETE BLOCK BOX	202.1
2. CURB INLET	202.2
3. DROP INLET	202.3
4. NON TRAFFIC BEARING GRATE INLET	202.4
5. TRAFFIC BEARING GRATE INLET	202.5
6. ACCESS COVER FOR STORMWATER JUNCTION BOX (PRIVATE)	203.0
7. ACCESS COVER FOR STORMWATER JUNCTION BOX (PUBLIC)	203.1
8. ACCESS COVER FOR CATCH BASIN AND THROAT INLET (PUBLIC)	203.2
9. UNDERDRAIN GENERAL NOTES	204.0
10. UNDERDRAIN TYPICAL LAYOUT	204.1
11. UNDERDRAIN CLEANOUTS (FLEXIBLE & RIGID)	204.2
12. STORM SEWER PIPE - GENERAL NOTES	205.0
13. CONCRETE BLOCK HEADWALL	205.1

TOWN OF REDINGTON BEACH			CURB & GUTTER, DRAINAGE STRUCTURES & PIPE INDEX	200.0
REV.BY	DATE			
		DATE OF APPROVAL		

TYPE "A"
MIAMI CURB & GUTTER
STD. 201.1

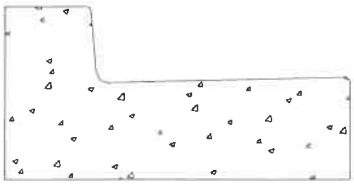

TYPE "F"
CURB & GUTTER
STD. 201.2

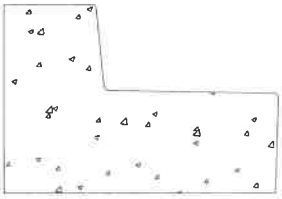

TYPE "AB"
MODIFIED CURB & GUTTER
STD. 201.3

TYPE "D"
CURB
STD. 201.4

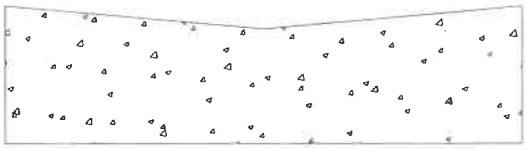

INVERTED CROWN
CURB & GUTTER
STD. 201.5

1. ALL CURB & GUTTER SHALL PROVIDE A 0.125" TO 0.25" CONTRACTION JOINT AT 10' CENTERS.
2. ALL CURB & GUTTER SHALL BE CONSTRUCTED IN COMPLIANCE WITH FLORIDA D.O.T. STANDARD SPECIFICATIONS PER F.D.O.T. ROADWAY AND TRAFFIC DESIGN STANDARDS INDEX NO. 300, LATEST REVISION.
3. TOP OF FINISHED PAVEMENT SHALL BE 0.25" ABOVE LIP OF GUTTER, LOW SIDE.

TOWN OF REDINGTON BEACH			CURB & GUTTER CONTROL SHEET	201.0
REV.BY	DATE			
		DATE OF APPROVAL		

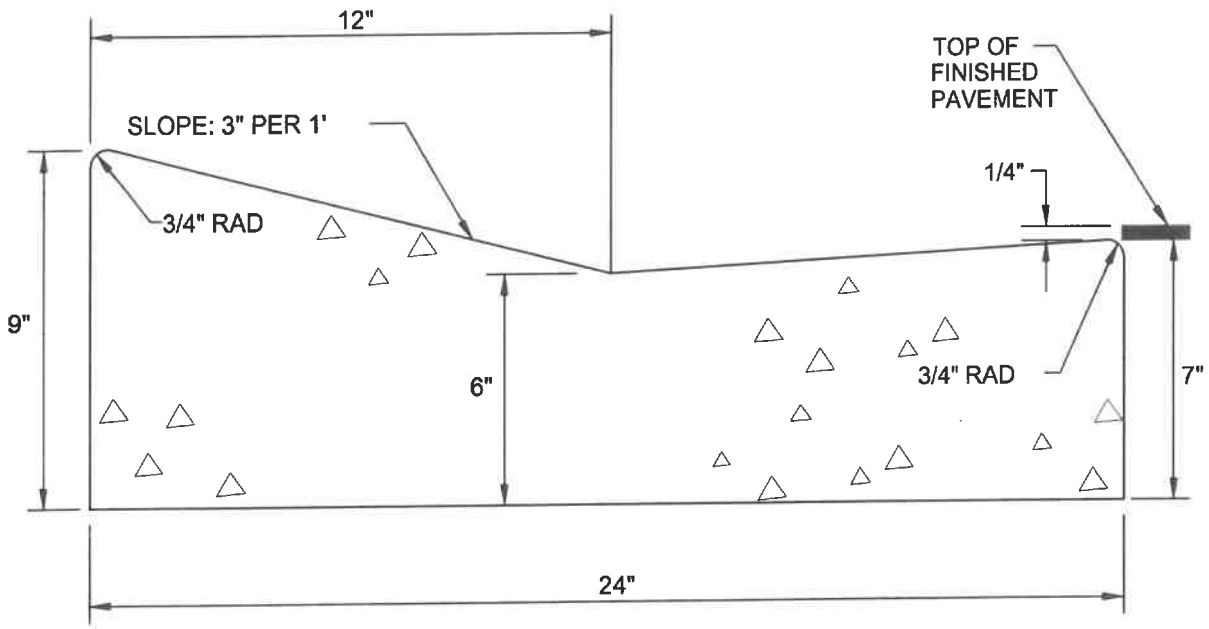

TYPE "A"
MIAMI CURB & GUTTER

A) CLASS 1 CONCRETE 3,000 P.S.I. AT 28 DAYS.

B) CURB AND GUTTER SHALL MEET THE SPECIFICATIONS ESTABLISHED BY FLORIDA D.O.T. STANDARD SPECIFICATIONS PER F.D.O.T. ROADWAY AND TRAFFIC DESIGN STANDARDS INDEX NO. 300, LATEST REVISION.

TOWN OF REDINGTON BEACH			TYPE A MIAMI CURB & GUTTER	201.1
REV.BY	DATE			
		DATE OF APPROVAL		

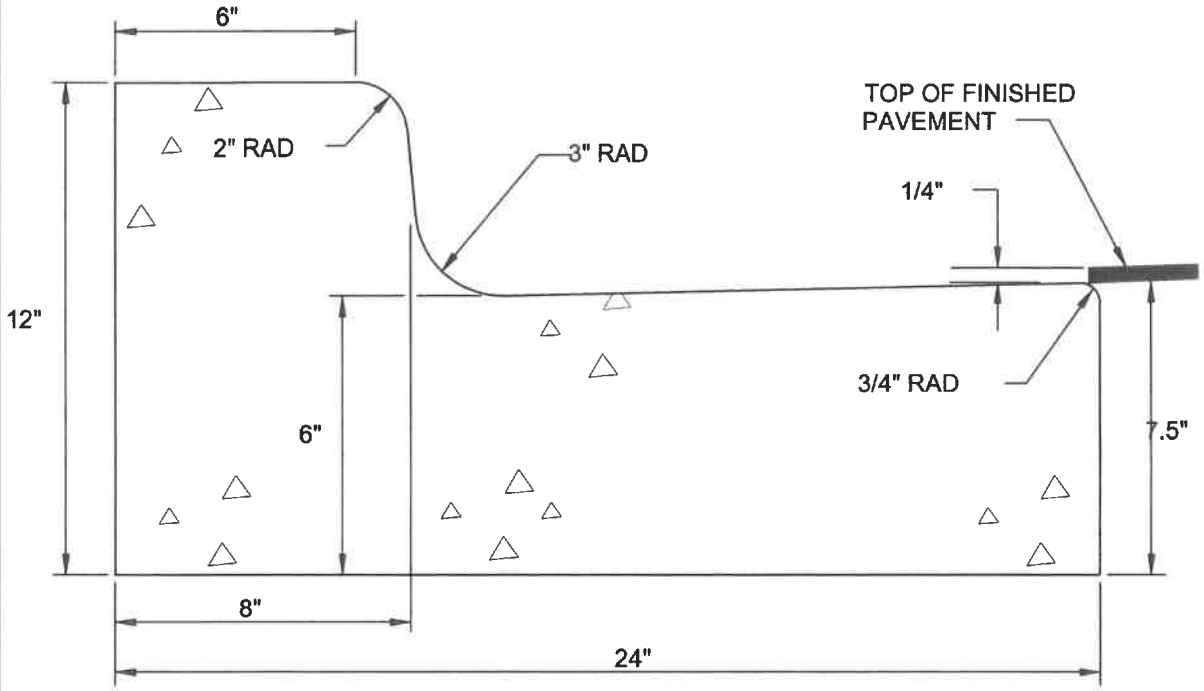

TYPE "F" BARRIER CURB & GUTTER

A) CLASS 1 CONCRETE 3,000 P.S.I. AT 28 DAYS.

B) CURB AND GUTTER SHALL MEET THE SPECIFICATIONS ESTABLISHED BY FLORIDA D.O.T. STANDARD SPECIFICATIONS PER F.D.O.T. ROADWAY AND TRAFFIC DESIGN STANDARDS INDEX NO. 300, LATEST REVISION.

TOWN OF REDINGTON BEACH			TYPE F CURB & GUTTER	201.2
REV.BY	DATE			
		DATE OF APPROVAL		

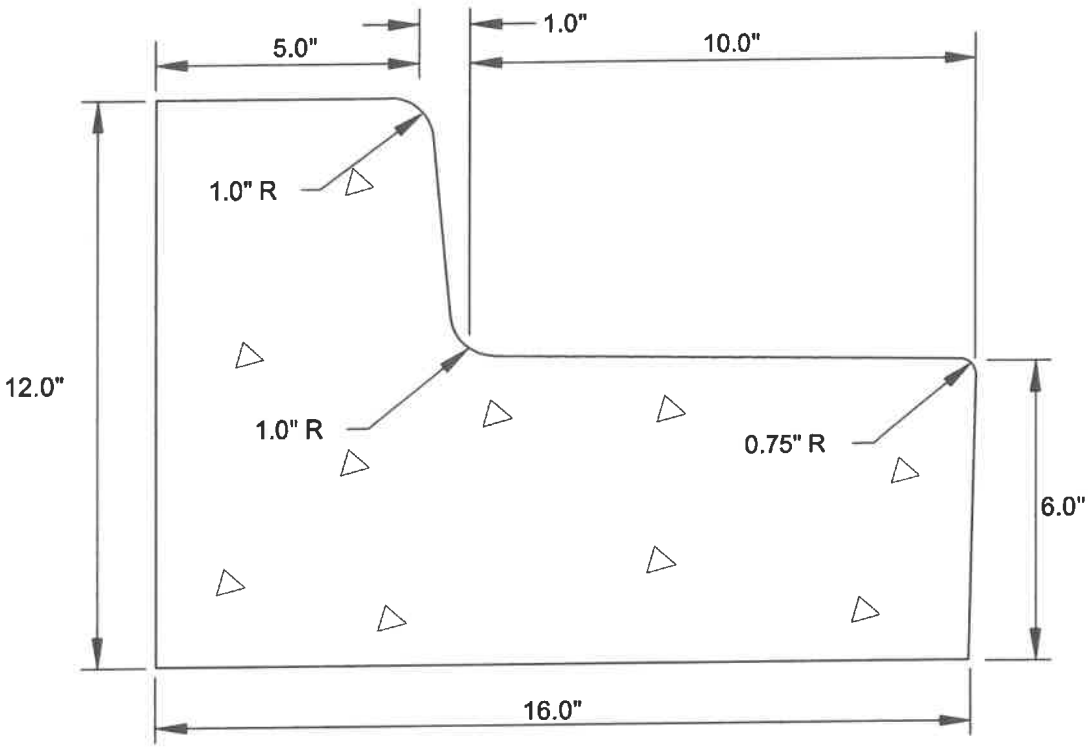

TYPE "AB"
MODIFIED CURB & GUTTER

A) CLASS 1 CONCRETE 3,000 PSI AT 28 DAYS.

B) CURB AND GUTTER SHALL MEET THE SPECIFICATIONS ESTABLISHED BY FLORIDA D.O.T. STANDARD SPECIFICATIONS PER F.D.O.T. ROADWAY AND TRAFFIC DESIGN STANDARDS STANDARDS INDEX NO. 300, LATEST REVISION.

TOWN OF REDINGTON BEACH			TYPE "AB" MODIFIED CURB & GUTTER	201.3
REV.BY	DATE			
		DATE OF APPROVAL		

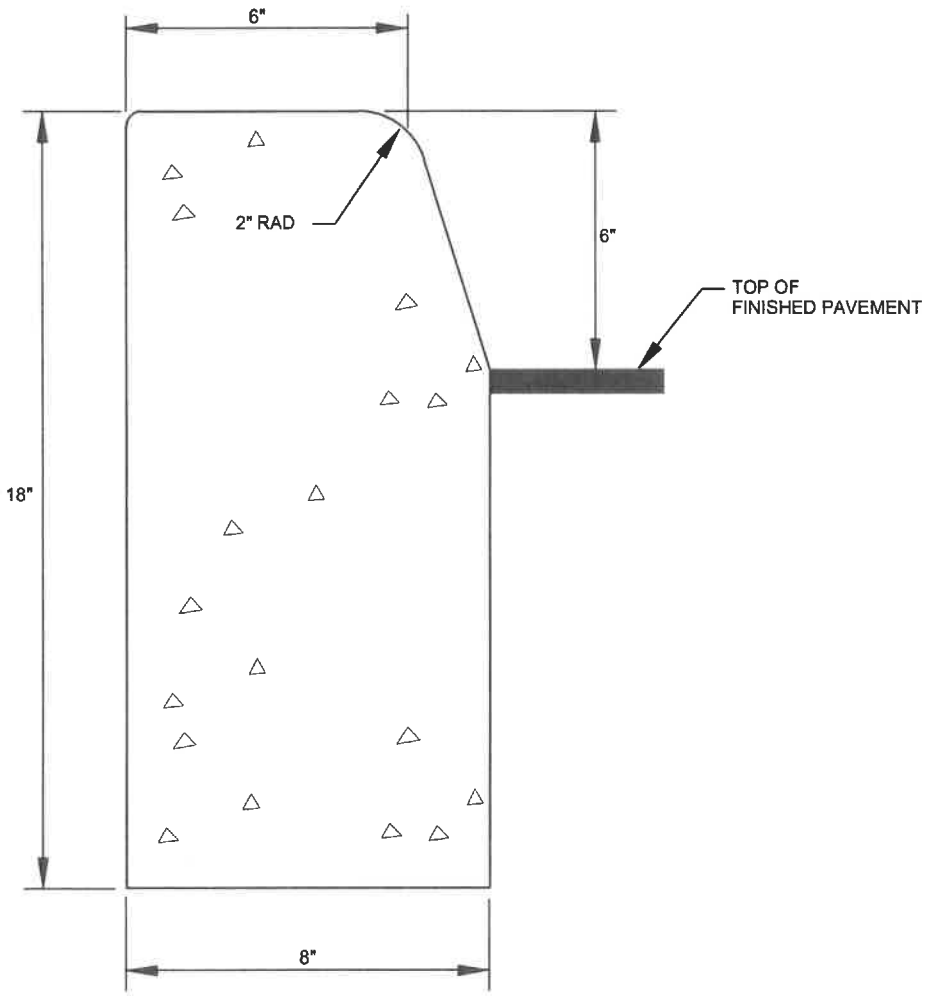

TYPE "D"
HIGH BACK CURB

A) CLASS 1 CONCRETE, 3,000 P.S.I. AT 28 DAYS.

B) CURB SHALL MEET THE SPECIFICATIONS ESTABLISHED BY F.D.O.T. STANDARD SPECIFICATIONS PER F.D.O.T. ROADWAY AND TRAFFIC DESIGN STANDARDS INDEX NO. 300, LATEST REVISION.

TOWN OF REDINGTON BEACH			TYPE D CURB	201.4
REV.BY	DATE			
		DATE OF APPROVAL		

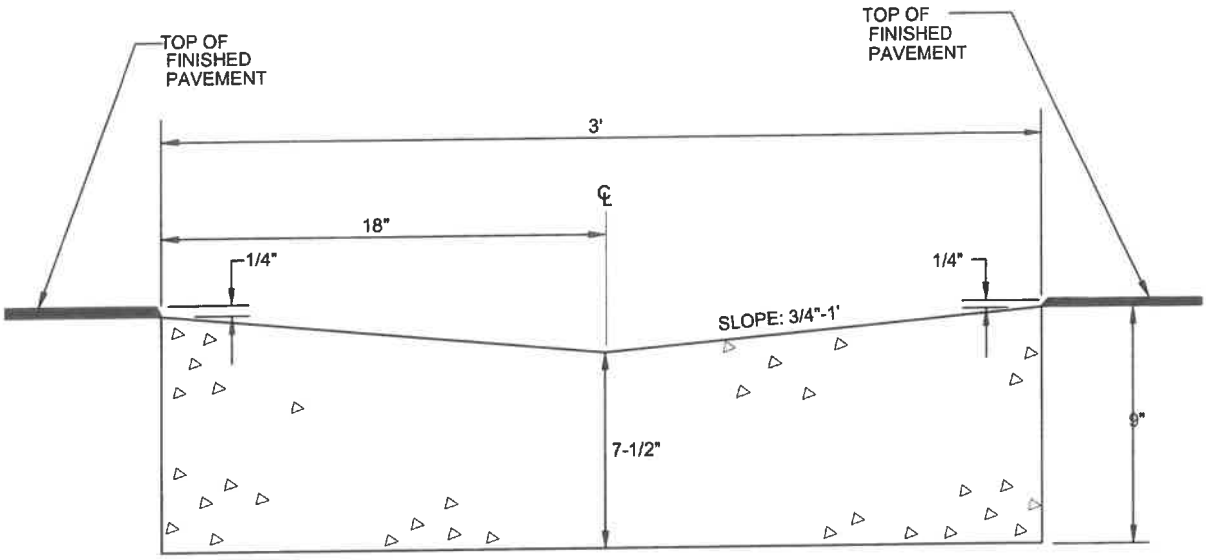

INVERTED CROWN GUTTER

A) CLASS 1 CONCRETE, 3,000 P.S.I. AT 28 DAYS.

B) CURB SHALL MEET SPECIFICATIONS ESTABLISHED BY FLORIDA D.O.T. STANDARD SPECIFICATIONS, PER F.D.O.T. ROADWAY AND TRAFFIC DESIGN STANDARDS INDEX NO. 300, LATEST REVISION.

C) SEE SHEET 401.9 FOR INVERTED CROWN APPLICATION.

NOTE: THIS TYPICAL SECTION SHALL BE CONSIDERED FOR PRIVATE ROAD USAGE ONLY! IT MUST BE APPROVED THRU THE PLANNING & TRANSPORTATION DEPARTMENTS, JOINTLY.

TOWN OF REDINGTON BEACH			INVERTED CROWN	201.5
REV.BY	DATE			
		DATE OF APPROVAL		

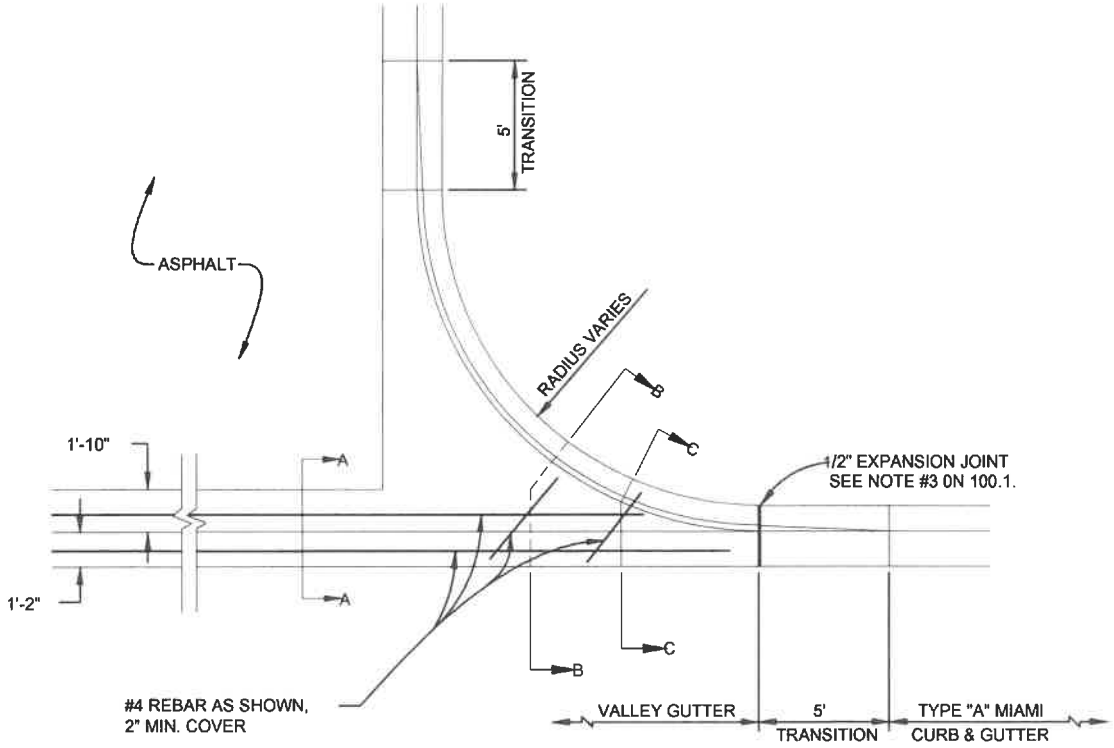

PLAN VIEW

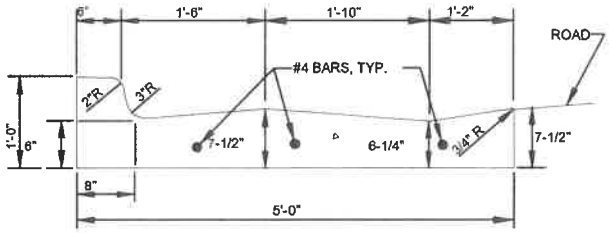

SECTION "B-B"

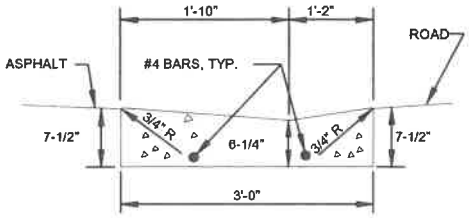

SECTION "A-A"

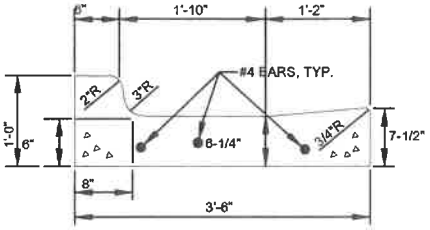

SECTION "C-C"

3' VALLEY CROSSING

* CLASS 1 CONCRETE, 3,000 P.S.I. AT 28 DAYS.

TOWN OF REDINGTON BEACH			VALLEY CROSSING	201.6
REV.BY	DATE			
		DATE OF APPROVAL		

GENERAL NOTES

1. ALL REFERENCED STANDARDS SHALL BE LATEST REVISION.
2. CONCRETE SHALL BE CLASS "1" AS SPECIFIED IN SECTION 345 OF F.D.O.T. SPECIFICATIONS
3. SEE SECTION 425-2.2 "MORTAR" OF FLORIDA D.O.T. SPECIFICATIONS.
4. IRON CASTING SHALL BE AS SPECIFIED IN SECTION 962-8 OF F.D.O.T. SPECIFICATIONS. SEE SECTION 425-5.
5. ALL REINFORCEMENT STEEL SHALL BE AS SPECIFIED IN SECTIONS 415 & 931.1 OF F.D.O.T. SPECIFICATIONS.
6. SEE FLORIDA D.O.T. SPECIFICATIONS FOR GRATINGS.
7. SEE FLORIDA D.O.T. SPECIFICATIONS FOR SECTION 125 "EXCAVATION FOR STRUCTURES."
8. PRECAST TOP AND BOTTOM TO BE F.D.O.T. STANDARDS WITH MINIMUM TRAFFIC BEARING 8" THICKNESS.
9. ALL STORMWATER PIPE SHALL BE INSTALLED BEHIND THE CURB OR EDGE OF PAVEMENT AND WITHIN THE RIGHT OF WAY AND WITHIN THE DRAINAGE EASEMENTS.
10. THE FOLLOWING IS THE DRAINAGE STRUCTURE WALL MINIMUM THICKNESS:

PRECAST	BLOCK
NON-TRAFFIC 6"	8" EITHER WAY

NOTE: FOR DRAINAGE STRUCTURES WITH PIPE DIAMETERS UP TO AND INCLUDING 24".
6" PRECAST WALLS ARE ACCEPTABLE FOR TRAFFIC BEARING.

DIMENSION INDEX

PIPE SIZE	TYPE	"C"	"D"	"E"	"F"	"G"	"H"
15"	RCP	2'8"	4'	5'	4'	5'4"	6'4"
12"x18"	RCP	"	"	"	"	"	"
18"	RCP	"	"	"	"	"	"
14"x23"	RCP	"	"	"	"	"	"
24"	RCP	3'4"	4'8"	5'8"	"	"	"
19"x30"	RCP	4'	5'4"	6'4"	"	"	"
30"	RCP	"	"	"	"	"	"
24"x38"	RCP	5'	6'4"	7'4"	"	"	"
36"	RCP	5'	6'4"	"	"	"	"
66"	RCP	8'5"	9'9"	10'9"	4'8"	6'0"	7'0"

TOWN OF REDINGTON BEACH

REV.BY	DATE

DATE OF APPROVAL

DRAINAGE CONTROL SHEET

202.0

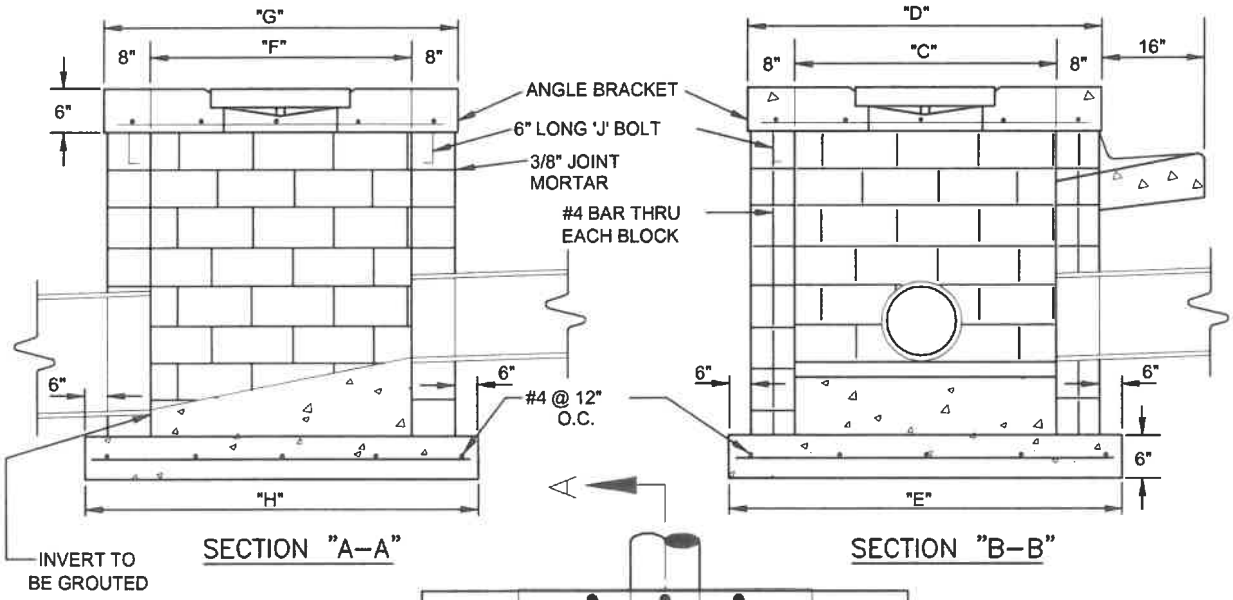

SECTION "A–A"

SECTION "B–B"

NOTE: WHEN PIPE DIAMETER IS GREATER THAN 24", THE CATCH BASIN WALLS SHALL BE 8" THICK.

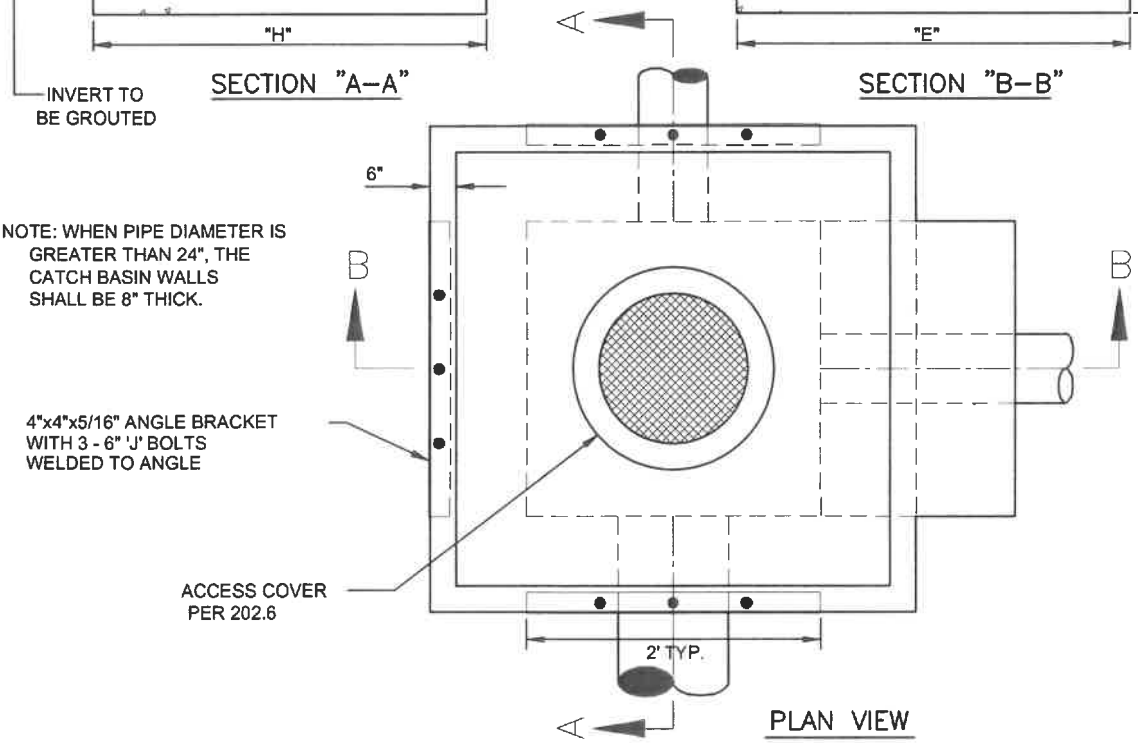

PLAN VIEW

NOTE: DIMENSIONS PER SECTION 202.0

A) THE FOLLOWING MATERIALS TO BE AS SPECIFIED IN THE FLORIDA D.O.T. SPEC'S. 1991, SECTION 346 CONCRETE, SECT. 962-8 IRON CASTING, SECT. 931-1 REINFORCEMENT STEEL, SECT. 425 INLETS, MANHOLES & JUNCTION BOXES.

B) FILL BLOCKS WITH 3,000 psi CONCRETE, USE #4 ROD IN EACH BLOCK, 16" O/C.

C) 2" MINIMUM COVER ON ALL REBAR.

D) USE #4 REBARS ON 6" CENTERS BOTH WAYS ON LID; NO.4 REBARS ON 12" CENTERS BOTH WAYS ON FLOOR SLAB.

E) SEE SHEET 202.0 FOR GENERAL NOTES AND DIMENSION INDEX.

F) ALL EXPOSED CORNERS AND EDGES TO BE CHAMFERED 3/4".

G) PRECAST BOXES AS SPECIFIED IN F.D.O.T. ROADWAY AND TRAFFIC DESIGN STANDARDS (2000) ARE AN ACCEPTABLE ALTERNATIVE AS APPROVED BY THE TRANSPORTATION DIRECTOR OR HIS DESIGNEE.

H) ALL PIPE ENTRIES TO CATCH BASIN TO BE GROUTED AND SEALED.

TOWN OF REDINGTON BEACH			TYPICAL CONC. BLOCK BOX	202.1
REV.BY	DATE			
		DATE OF APPROVAL		

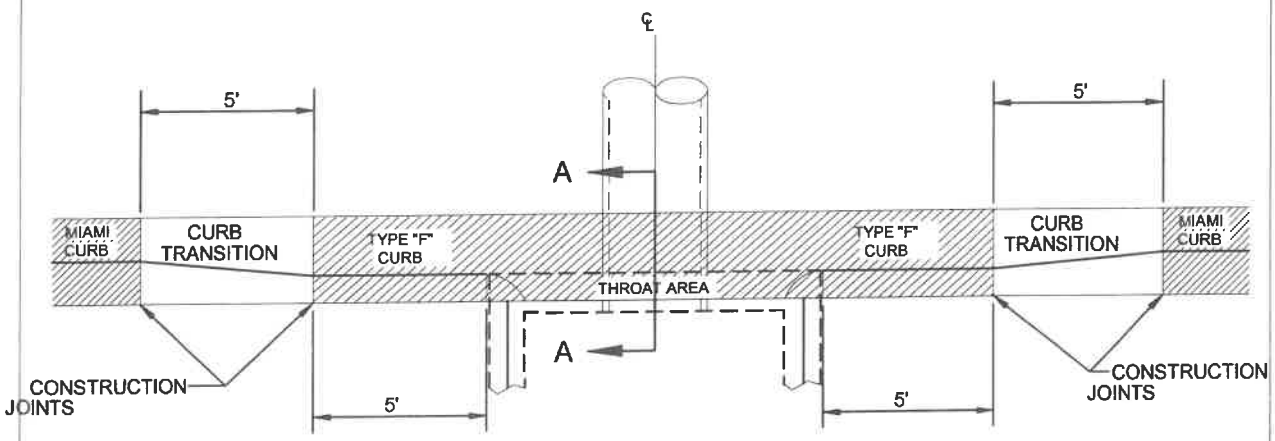

PLAN VIEW

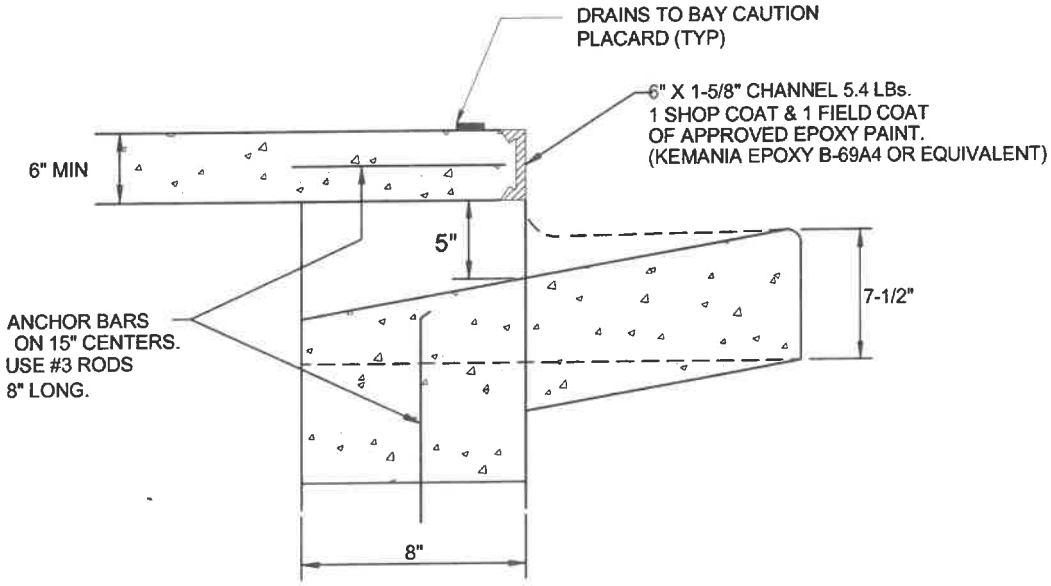

SECTION A-A

A) USE STANDARD CATCH BASIN & JUNCTION BOX DIMENSION INDEX (SHEET # 202.0) DETAILS AND COVER (SHEET # 202.6).

B) SEE CURB & GUTTER INDEX (SHEET # 201.0) FOR APPLICABLE CURB TYPE.

C) SEE SHEET # 202.0 "GENERAL NOTES" FOR APPLICABLE INFORMATION.

D) PRECAST BOXES AS SPECIFIED IN F.D.O.T. ROADWAY AND TRAFFIC DESIGN STANDARDS (2006) ARE AN ACCEPTABLE ALTERNATIVE AS APPROVED BY THE DIRECTOR OR HIS DESIGNEE.

E) ANGLE BRACKETS SHOWN ON 202.1 NOT REQUIRED.

TOWN OF REDINGTON BEACH			CURB INLET	202.2
REV.BY	DATE			
		DATE OF APPROVAL		

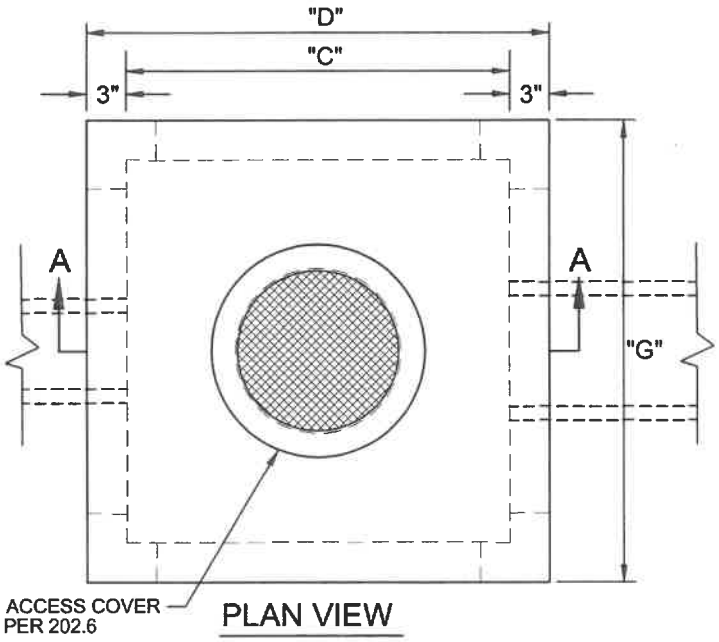

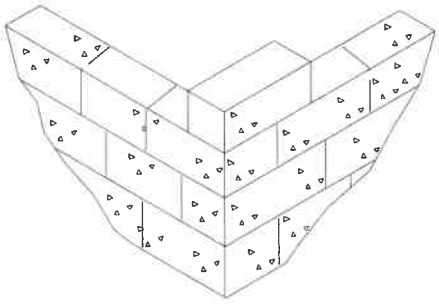

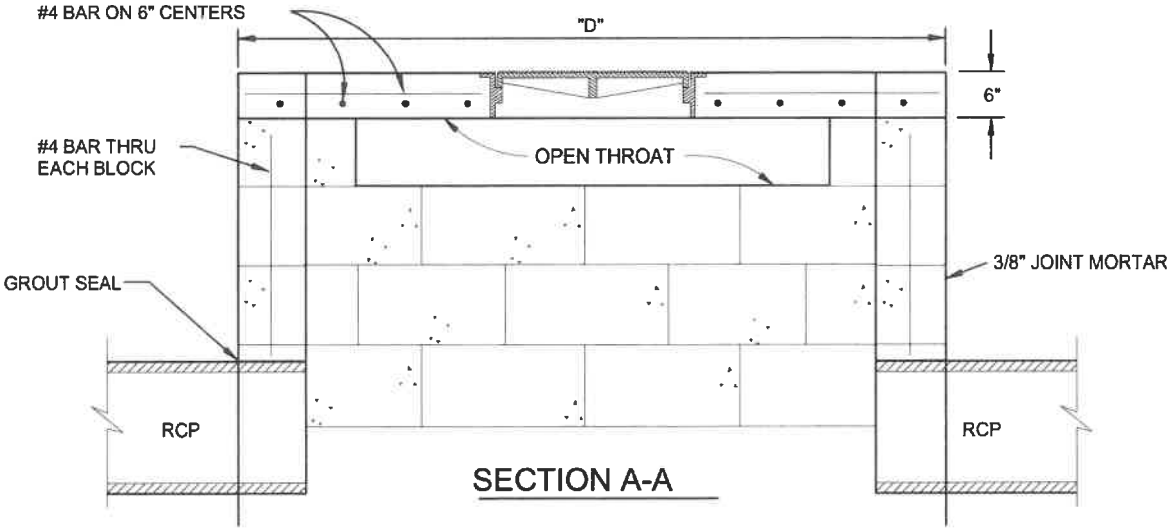

A) DROP INLET IS NOT DESIGNED TO BE SUBJECTED TO VEHICULAR TRAFFIC.

B) NUMBER OF SIDES OPEN FOR DRAINAGE DEPENDS UPON FLOW VOLUME REQUIREMENTS.

C) THE FOLLOWING MATERIALS SHALL BE AS SPECIFIED IN FLORIDA D.O.T. SPEC'S., 2000. SEC 346 CONCRETE, SEC 962-8 IRON CASTING, SEC 931-1 REINFORCED STEEL.

D) FILL BLOCKS WITH 3,000 P.S.I. CONCRETE (EACH CELL), USE #4 ROD IN EACH BLOCK, 16" O/C.

E) USE #4 ROD ON 6" CENTERS BOTH WAYS ON LID.

F) SEE SHEET # 202.0 GENERAL NOTES AND DIMENSIONS INDEX, ALSO SHEET 202.1 TYP. CONC. BOX.

G) PRECAST BOXES TO F.D.O.T. SPECIFICATIONS ARE AN ACCEPTABLE ALTERNATE.

H) INVERT TO BE GROUTED (SEE 202.1).

I) PRECAST BOXES AS SPECIFIED IN F.D.O.T. ROADWAY AND TRAFFIC DESIGN STANDARDS ARE AN ACCEPTABLE ALTERNATIVE AS APPROVED BY THE TRANSPORTATION DIRECTOR OR HIS DESIGNEE.

J) ANGLE BRACKETS SHOWN ON 202.1 NOT REQUIRED.

TOWN OF REDINGTON BEACH			THROAT DETAIL FOR DROP INLET	202.3
REV.BY	DATE			
		DATE OF APPROVAL		

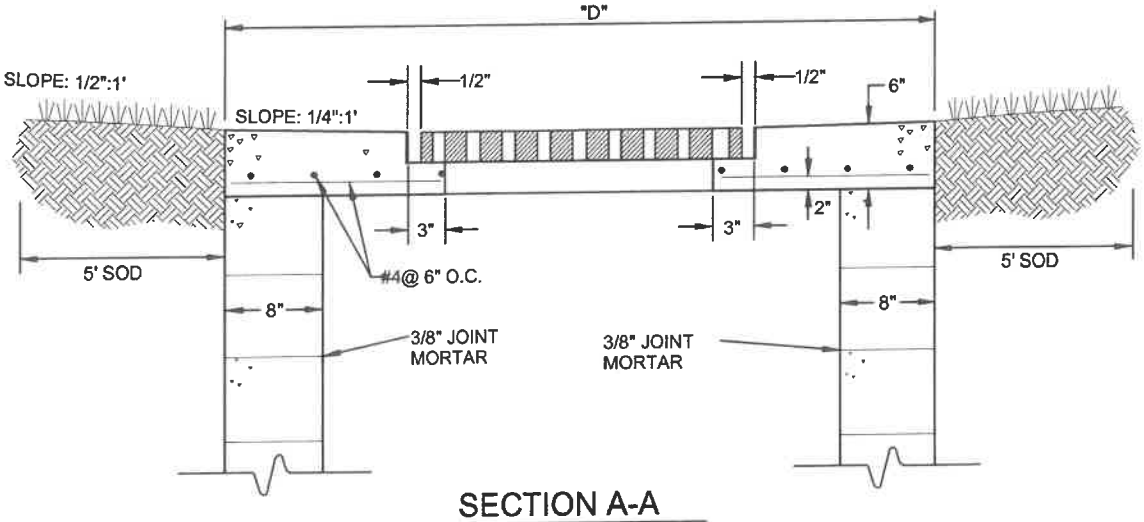

SECTION A-A

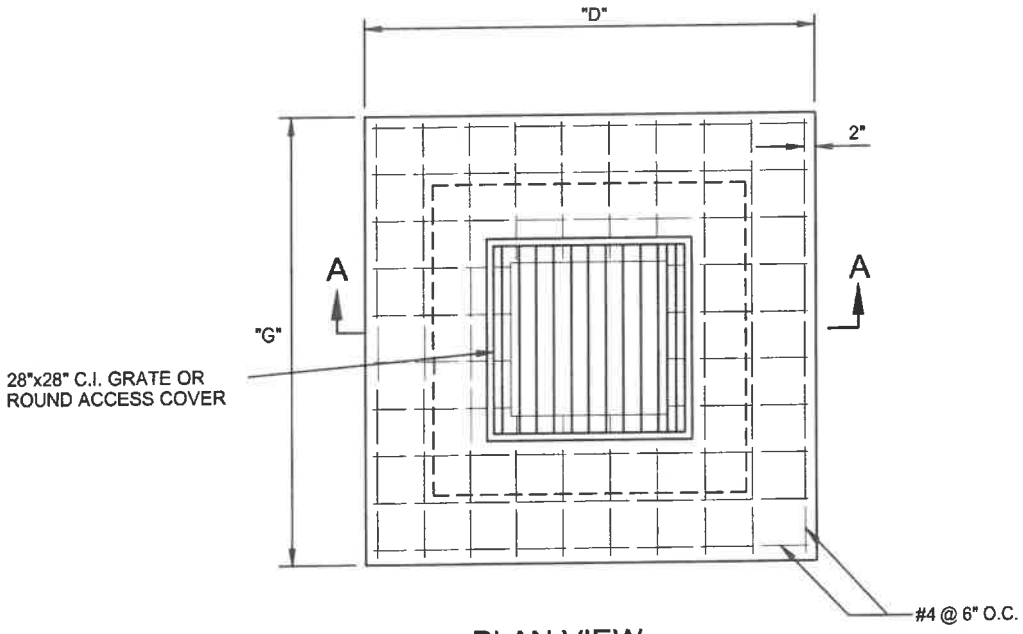

PLAN VIEW

NOTE: DIMENSIONS "D" & "G" PER SECTION 202.0

A) ALTERNATE C.I. GRATES, 18"X 24", 24"X 24", 28"X 36".

B) SOD TO BE PLACED A MINIMUM OF 5' AROUND BOX.

C) THE FOLLOWING MATERIALS SHALL BE AS SPECIFIED IN FLORIDA D.O.T. SPEC'S., 2000. SEC 346 CONCRETE, SEC 962-8 IRON CASTING, SEC 931-1 REINFORCED STEEL.

D) FILL BLOCKS WITH 3,000 P.S.I. CONCRETE (EACH CELL), USE # 4 ROD IN EACH BLOCK, 16" O/C.

E) USE #4 ROD ON 6" CENTERS BOTH WAYS ON LID.

F) SEE SHEET # 202.0 GENERAL NOTES AND DIMENSIONS INDEX, ALSO SHEET 202.1 TYP. CONC. BOX.

G) PRECAST BOXES AS SPECIFIED IN F.D.O.T. ROADWAY AND TRAFFIC DESIGN STANDARDS ARE AN ACCEPTABLE ALTERNATIVE AS APPROVED BY THE TRANSPORTATION DIRECTOR OR HIS DESIGNEE.

H) ANGLE BRACKETS SHOWN ON 202.1 NOT REQUIRED.

TOWN OF REDINGTON BEACH			NON-TRAFFIC BEARING BOX LID	202.4
REV.BY	DATE			
		DATE OF APPROVAL		

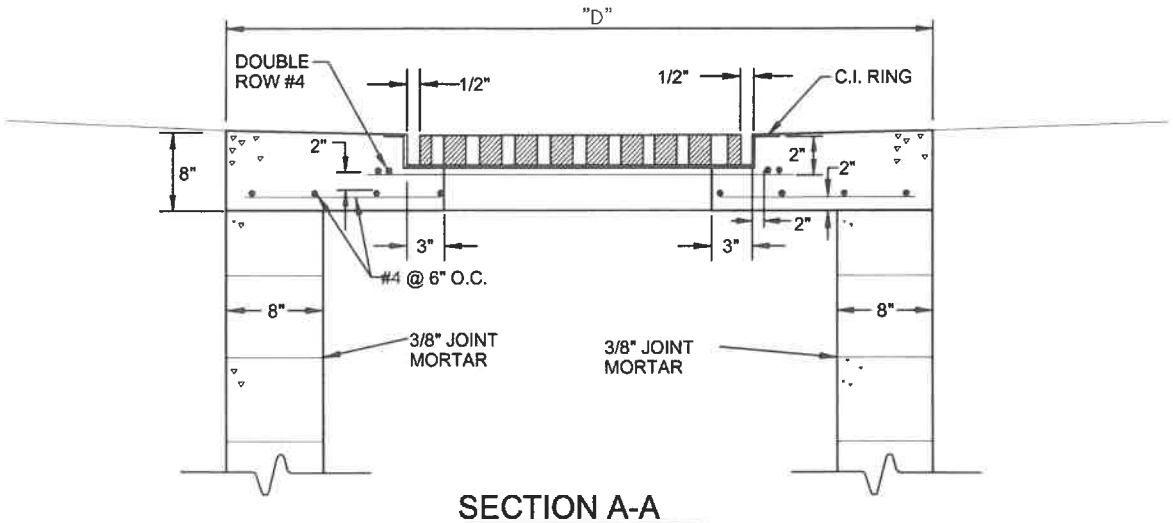

SECTION A-A

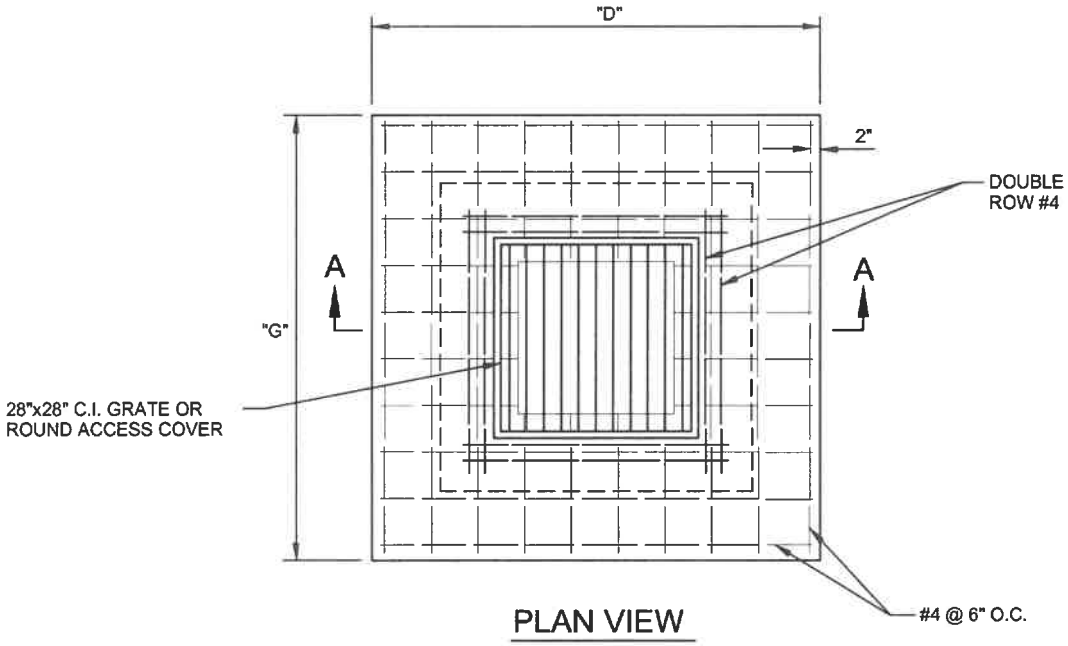

PLAN VIEW

NOTE: DIMENSIONS "D" & "G" PER SECTION 202.0

A) ALTERNATE C.I. GRATES, 18"X 24", 24"X 24", 28"X 36" OR ACCESS COVER (202.6).

B) 8" TRAFFIC BEARING LID W/ REINFORCING C.I. RING & DOUBLE ROW OF #4 REBAR.

C) FOLLOWING MATERIALS ARE SPECIFIED IN FLORIDA D.O.T. SPEC'S., 2000. SEC 346 CONCRETE, SEC 962-8 IRON CASTING, SEC 931-1 REINFORCED STEEL.

D) FILL BLOCKS WITH 3,000 P.S.I. CONCRETE (EACH CELL), USE #4 ROD IN EACH BLOCK, 16" O/C.

E) USE #4 ROD ON 6" CENTERS BOTH WAYS ON LID. (SEE 202.3 E)

F) SEE SHEET # 202.0 GENERAL NOTES AND DIMENSIONS INDEX, ALSO SHEET 202.1 TYP. CONC. BOX.

G) INVERT TO BE GROUTED (SEE 202.1).

H) PRECAST BOXES AS SPECIFIED IN F.D.O.T. ROADWAY AND TRAFFIC DESIGN STANDARDS ARE AN ACCEPTABLE ALTERNATIVE AS APPROVED BY THE TRANSPORTATION DIRECTOR OR HIS DESIGNEE.

I) ANGLE BRACKETS SHOWN ON 202.1 NOT REQUIRED.

TOWN OF REDINGTON BEACH			TRAFFIC BEARING BOX LID	202.5
REV.BY	DATE			
		DATE OF APPROVAL		

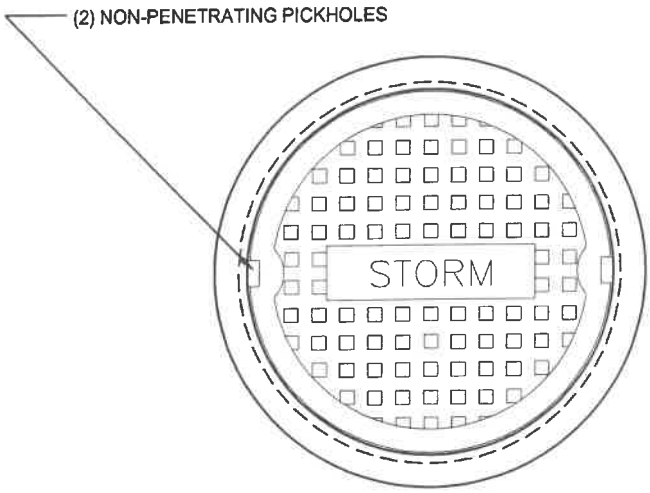

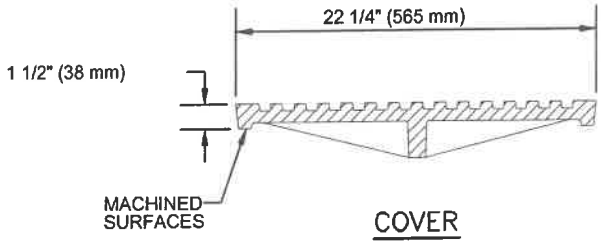

COVER

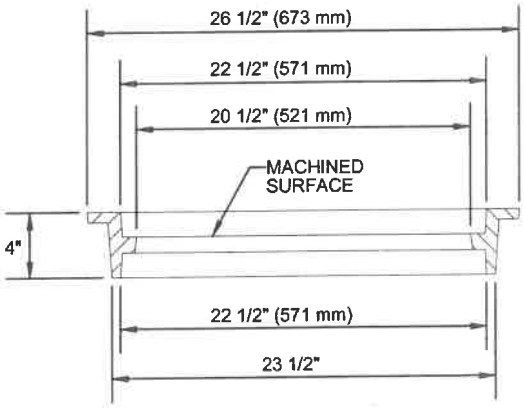

RING

USF 1110 RING & PROPOSED COVER

NOTE:

1 - MATERIAL; ASTM-A48 CLASS 30B GRAY IRON.
2 - COVER WEIGHT: 105 LBS. APPROX.
3 - RING WEIGHT: 90 LBS. APPROX.

TOWN OF REDINGTON BEACH			ACCESS COVER FOR STORMWATER JUNCTION BOX (PRIVATE)	203.0
REV.BY	DATE			
		DATE OF APPROVAL		

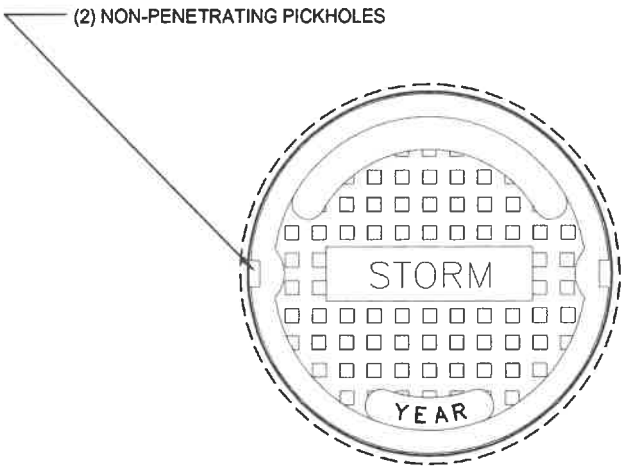

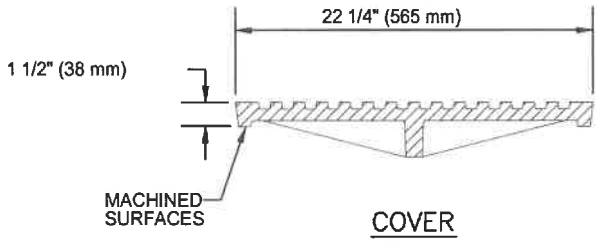

COVER

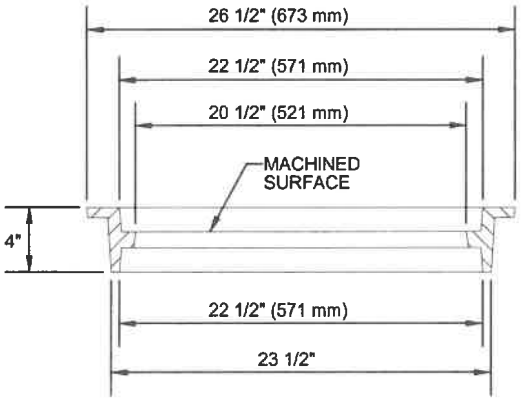

RING

USF 1110 RING & PROPOSED COVER

NOTE:

1 - MATERIAL; ASTM-A48 CLASS 30B GRAY IRON.
2 - COVER WEIGHT: 105 LBS. APPROX.
3 - RING WEIGHT: 90 LBS. APPROX.

TOWN OF REDINGTON BEACH			ACCESS COVER FOR STORMWATER JUNCTION BOX (PUBLIC)	203.1
REV.BY	DATE			
		DATE OF APPROVAL		

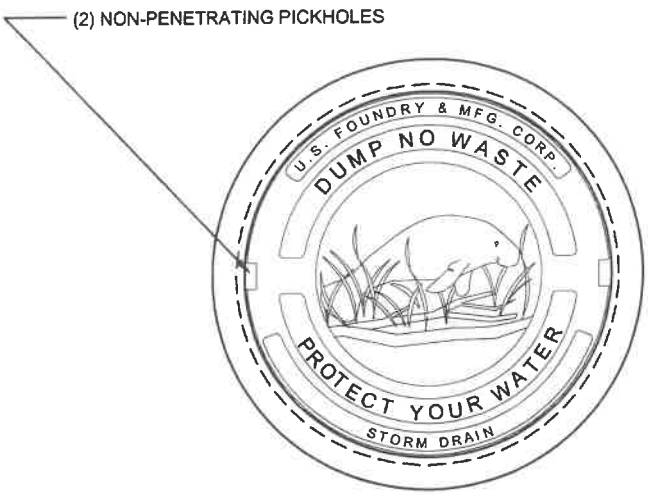

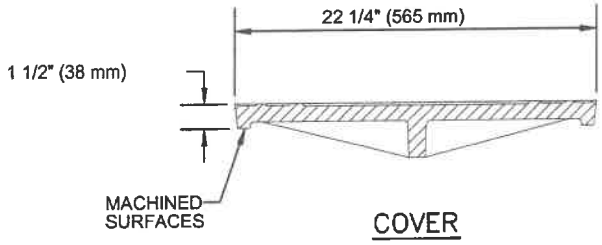

COVER

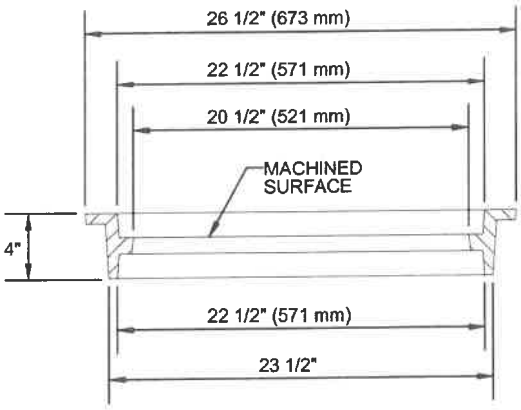

RING

USF 1110 RING & PROPOSED COVER

NOTE:

1 - MATERIAL; ASTM-A48 CLASS 30B GRAY IRON.
2 - COVER WEIGHT: 105 LBS. APPROX.
3 - RING WEIGHT: 90 LBS. APPROX.

TOWN OF REDINGTON BEACH			ACCESS COVER FOR CATCH BASIN & THROAT INLET (PUBLIC)	203.2
REV.BY	DATE			
		DATE OF APPROVAL		

UNDERDRAIN

1. CORRUGATED POLYETHYLENE TUBING

CORRUGATED POLYETHYLENE TUBING WITH A FILTER FABRIC WRAP, UNLESS OTHERWISE NOTED, MAY BE USED FOR UNDERDRAIN APPLICATIONS ASSOCIATED WITH ROADWAY CONSTRUCTION PROVIDING THE FOLLOWING SPECIFICATIONS ARE MET:

A) THE CORRUGATED POLYETHYLENE TUBING SHALL MEET THE REQUIREMENTS OF ASTM F-405.

B) THE CORRUGATED POLYETHYLENE TUBING SHALL HAVE A FILTER FABRIC SOCK MEETING F.D.O.T. SPEC. 948-3, LATEST REVISION. IF PERFORATIONS IN PIPE ARE LESS THAN 3/4", THEN FILTER FABRIC SOCK MAY BE OMITTED.

C) THE ENVELOPE MATERIAL SURROUNDING THE TUBING SHALL BE CRUSHED STONE OR WASHED SHELL. THE THICKNESS OF THE ENVELOPE MATERIAL SHALL BE EQUAL TO OR GREATER THAN THE DIAMETER OF THE TUBING, PLUS 12".

D) CORRUGATED POLYETHYLENE TUBING SHALL NOT BE ACCEPTABLE UNDER ROADWAYS.

E) EXTRA CARE SHALL BE TAKEN DURING PLACEMENT TO MAINTAIN PROPER LINE AND GRADE, TO BE PLACED W/ SLOPE OF ROAD.

F) A CLEAN-OUT SHALL BE CONSTRUCTED AT THE END OF EACH RUN OF UNDER-DRAIN. MAXIMUM SPACING EVERY 100 FEET.

G) SOD 3' AROUND 18" CONC. SQUARE.

*NOTE: TRANSPORTATION DIRECTOR OR HIS DESIGNEE'S APPROVAL IS REQUIRED FOR THE USE OF FLEXIBLE UNDERDRAIN PIPE.

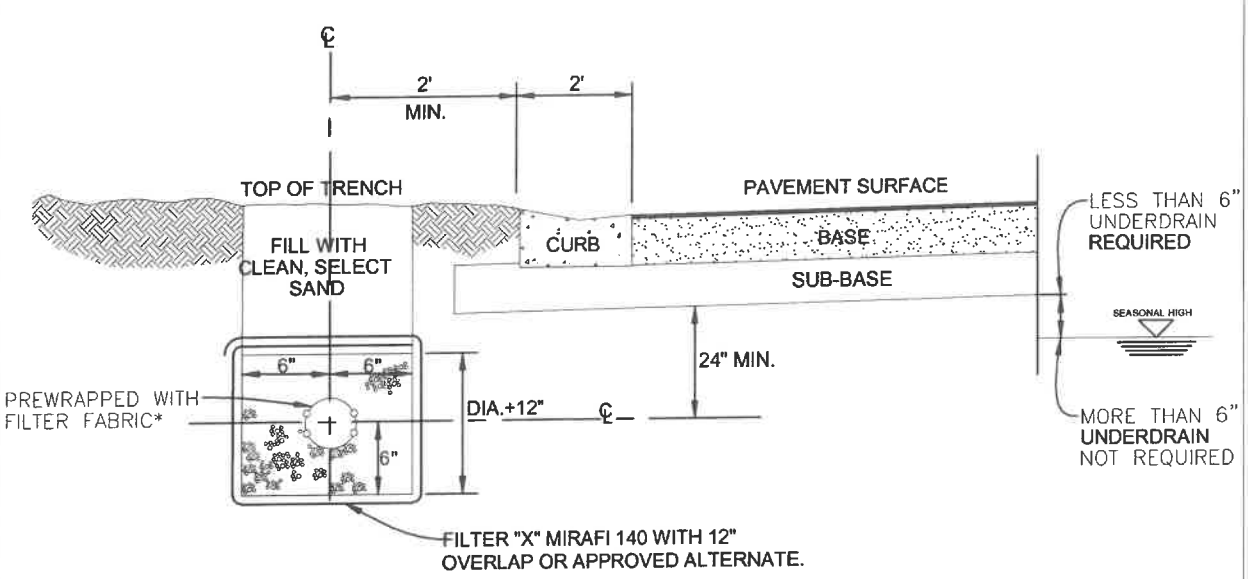

UNDERDRAIN PLACEMENT

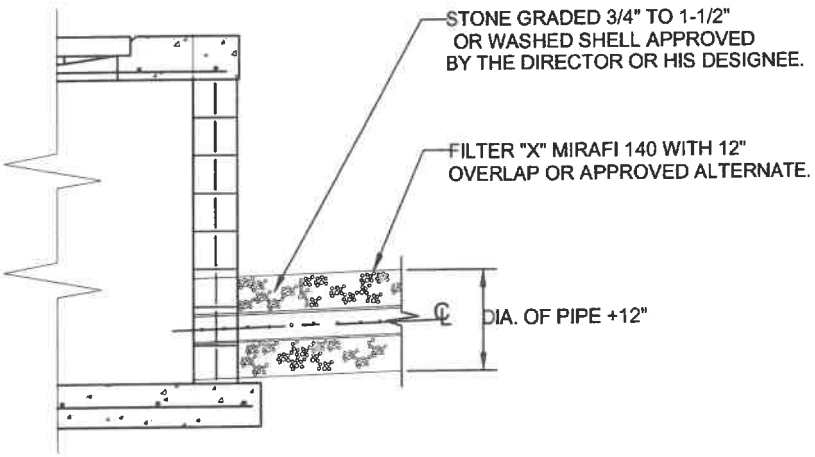

UNDERDRAIN TIE TO INLET

A) LOCATION OR NEED FOR UNDERDRAIN TO BE APPROVED BY THE DIRECTOR OR HIS DESIGNEE.

B) UNDERDRAIN SHALL BE AS SPECIFIED IN SECTION 440 OF FLORIDA DEPT. OF TRANSPORTATION SPEC. (2000 OR LATEST REVISION).

C) 6" TO 8" PERFORATED PIPE AS REQUIRED.

D) BACKFILL WITH CLEAN, SELECT SAND TO LINES SHOWN ON PLANS.

* IF PIPE PERFORATIONS ARE SMALLER THAN 3/4", THEN FILTER FABRIC SOCK MAY OMITTED.

TOWN OF REDINGTON BEACH			TYPICAL UNDERDRAIN LAYOUT	204.1
REV.BY	DATE			
		DATE OF APPROVAL		

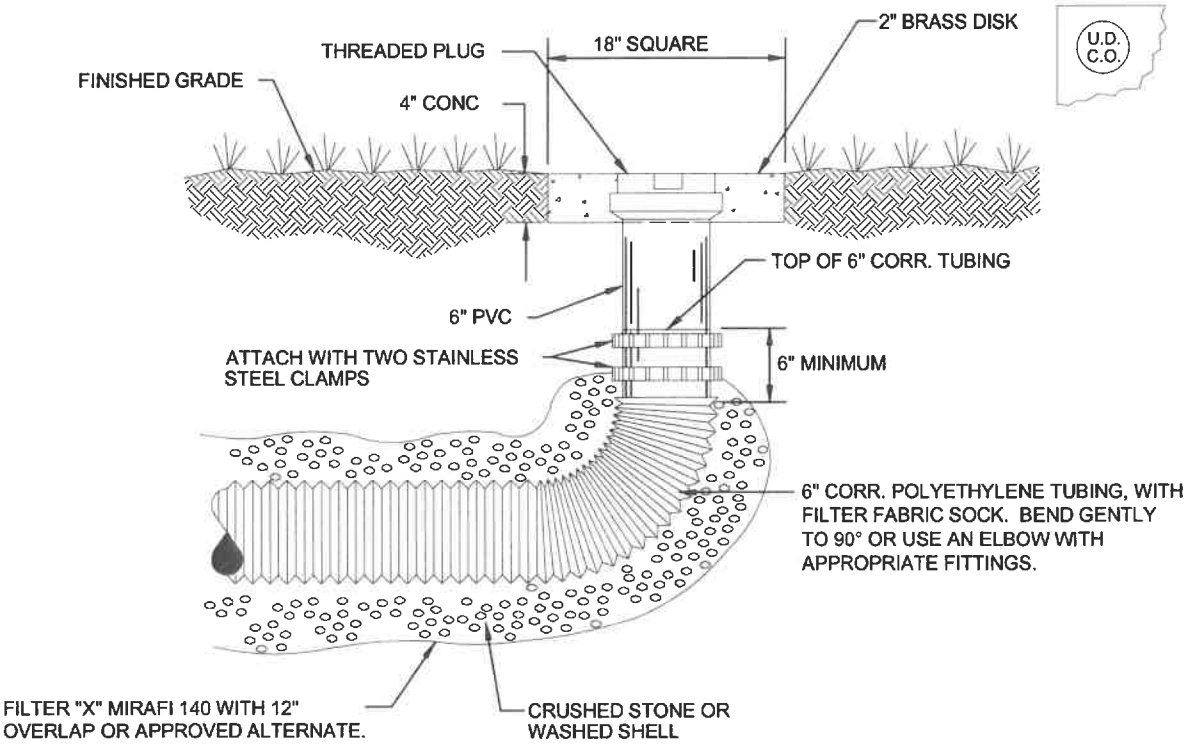

UNDERDRAIN CLEAN-OUT DETAIL
CORRUGATED POLYETHYLENE TUBING

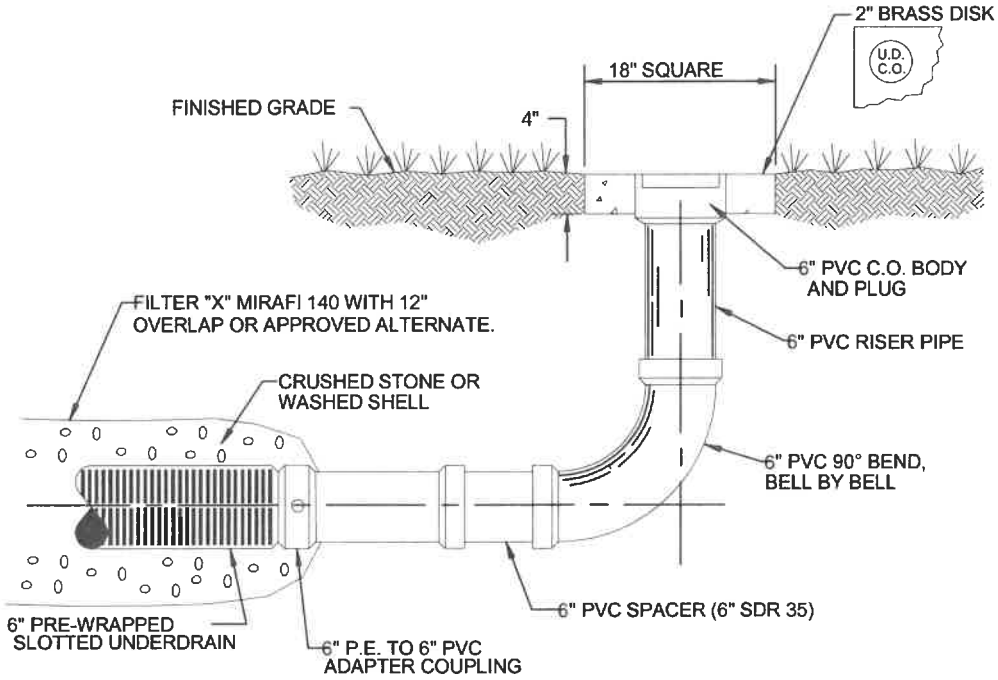

UNDERDRAIN CLEAN-OUT DETAIL - RIGID

* MAXIMUM SPACING EVERY 100 FEET.

TOWN OF REDINGTON BEACH			UNDERDRAIN CLEAN-OUTS (FLEXIBLE & RIGID)	204.2
REV.BY	DATE			
		DATE OF APPROVAL		

METAL STORM SEWER PIPE, GENERAL NOTES

A. SHALL MEET REQUIREMENTS OF SECTION 430 AND 943 OF THE F.D.O.T.'s LATEST REVISION/UPDATE SPECIFICATIONS FOR ROAD AND BRIDGE CONSTRUCTION AND ITS SUPPLEMENT. ALL PIPE SHALL BE TYPE 'A', FULLY BITUMINOUS COATED.

B. SHALL HAVE GASKETED WATER TIGHT JOINTS AT ALL LOCATIONS.

C. SHALL HAVE THE PROJECT SITE TESTED BY A CERTIFIED LAB FOR pH, RESISTIVITY, SULFATES AND CHLORIDES. TESTS SHALL BE IN ACCORDANCE WITH FLORIDA METHOD OF TEST FM 5-550, 551, 552 & 553 AND SUBMITTED TO THE TRANSPORTATION DEPARTMENT FOR REVIEW.

D. SHALL HAVE A MINIMUM COVER OF 18".

E. SHALL NOT BE ALLOWED WITHIN THE ROAD RIGHT-OF-WAY OR CARRY RIGHT-OF-WAY RUNOFF.

F. ALL STORMWATER PIPE SHALL BE INSTALLED BEHIND THE CURB OR EDGE OF PAVEMENT AND WITHIN THE RIGHT OF WAY.

HDPE STORM SEWER PIPE GENERAL NOTES

A. HDPE SHALL MEET CURRENT F.D.O.T. STANDARD SPECIFICATIONS.

B. MINIMUM COVER - 9" (TOP OF PIPE TO BOTTOM OF RIDGED PAVEMENT OF DRIVEWAY)
- 15" (TOP OF PIPE TO BOTTOM OF FLEXIBLE BASE OF DRIVEWAY)

C. SIZES ARE LIMITED TO CURRENT F.D.O.T. STANDARD SPECIFICATIONS UNLESS OTHERWISE APPROVED BY CITY ENGINEER OR SUPERINTENDENT OF PUBLIC WORKS.

D. HDPE PIPE IS NOT ALLOWED UNDER ROADWAY. UNLESS OTHERWISE APPROVED BY CITY ENGINEER OR SUPERINTENDENT OF PUBLIC WORKS.

FIBER OR WIRED REINFORCED CONC. PIPE, GENERAL NOTES

A. FRCP SHALL MEET CURRENT F.D.O.T. STANDARD SPECIFICATIONS. UNLESS OTHERWISE APPROVED BY CITY ENGINEER OR SUPERINTENDENT OF PUBLIC WORKS.

B. SIZES LIMITED TO F.D.O.T. CURRENT STANDARD SPECIFICATIONS.

TOWN OF REDINGTON BEACH			STORM SEWER PIPE GENERAL NOTES	205.0
REV.BY	DATE			
		DATE OF APPROVAL		

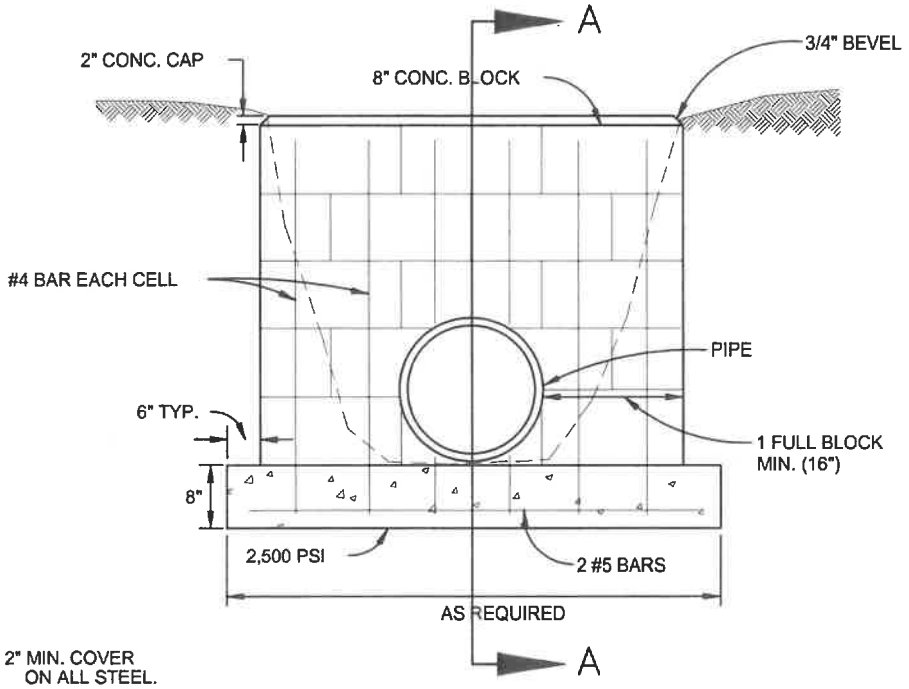

NOTE: 1) 2" MIN. COVER ON ALL STEEL.
2) EACH CELL OF BLOCK TO BE POURED

END VIEW

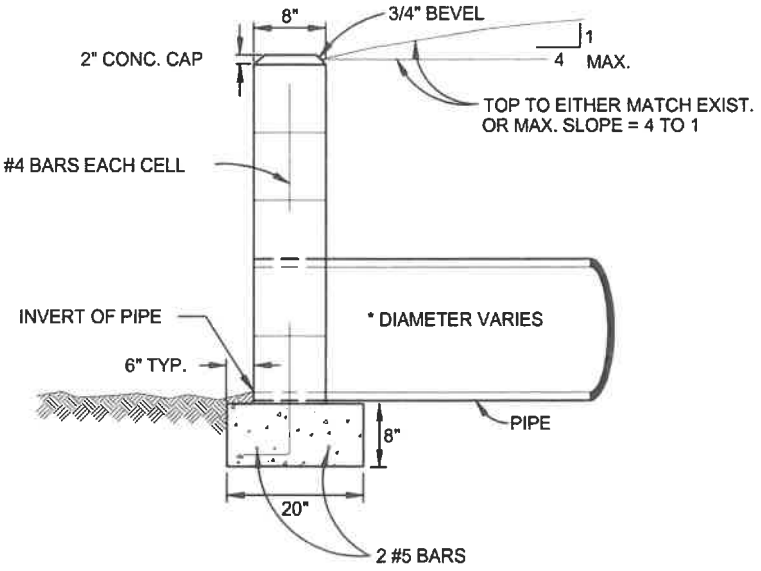

SECTION A–A

TOWN OF REDINGTON BEACH			CONCRETE BLOCK HEADWALL	205.1
REV.BY	DATE			
		DATE OF APPROVAL		

SIDEWALKS INDEX

	SHEET NO.
300 SIDEWALKS	300.0
1. SIDEWALK REQUIREMENTS	301.1
2. HANDICAPPED RAMP SHEET #1	302.1
3. HANDICAPPED RAMP SHEET #2	302.2
4. CURB RAMP DETECTABLE WARNINGS	302.3

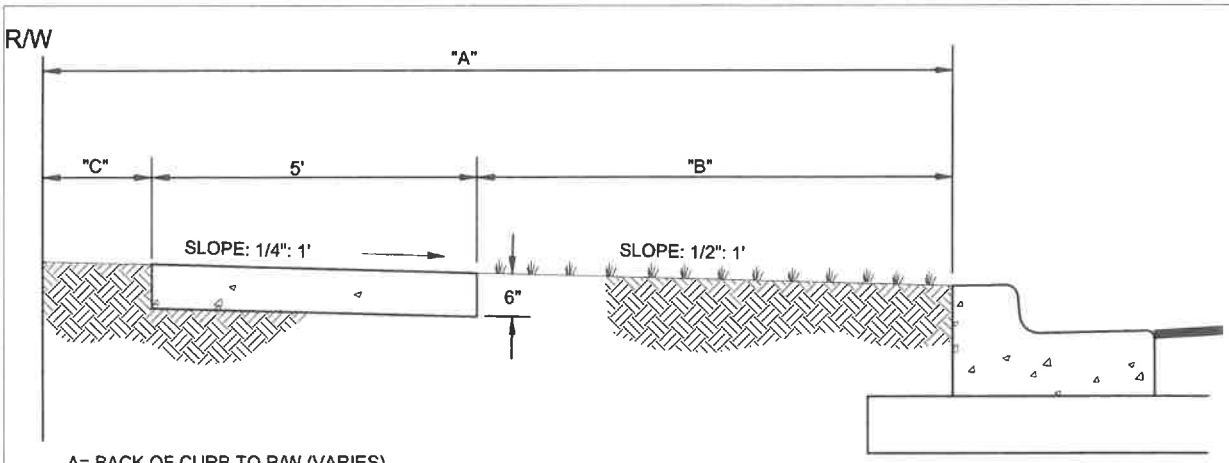

A= BACK OF CURB TO R/W (VARIES)

B= UNPAVED AREA (VARIES). REFER TO F.D.O.T. GREEN BOOK, TABLE 3-12, LATEST REVISION.

C= VARIES, SEE 401 SERIES

TYPICAL SIDEWALK LOCATION

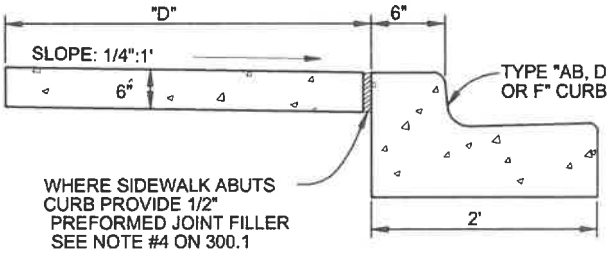

D= SIDEWALK WIDTH SHALL BE 6' STANDARD, WHERE WALK ABUTS TYPE "AB, D OR F" CURB. WHERE SPEED LIMIT IS 25 MPH OR LESS, WIDTH CAN BE 5'-6".

* SEE SHEET 300.1 "GENERAL NOTES" FOR FURTHER INFORMATION

ALTERNATE SIDEWALK LOCATION

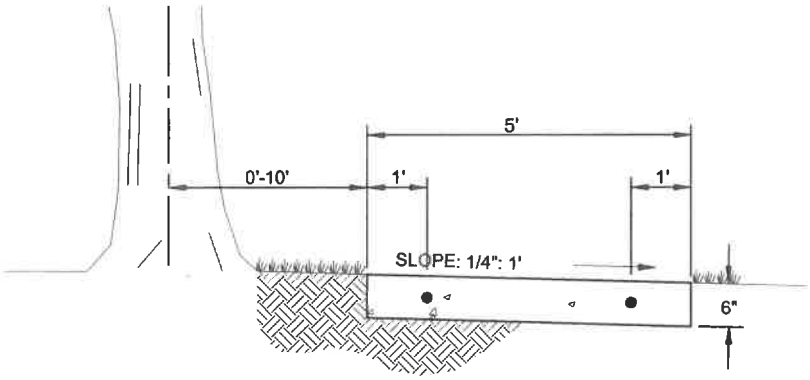

SIDEWALK LOCATION CLOSE TO TREES

TOWN OF REDINGTON BEACH			SIDEWALK REQUIREMENTS	301.1
REV.BY	DATE			
		DATE OF APPROVAL		

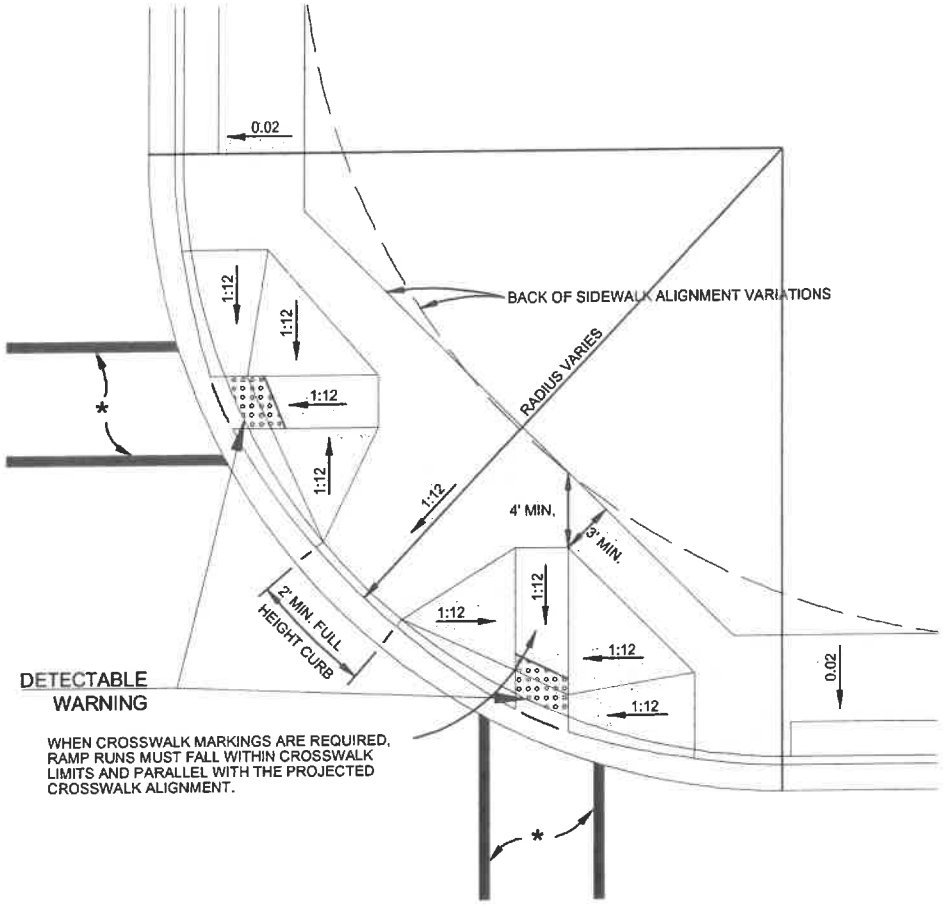

* CROSSWALK WIDTHS AND CONFIGURATION VARY; MUST CONFORM TO FDOT INDEX NO. 17344 AND 17346.

1) CURB CUT RAMPS ARE TO BE LOCATED AS SHOWN ON PLANS.

2) SEE SHEETS # 300.1 "GENERAL NOTES" & # 301.2 "HANDICAPPED RAMP" SHT 2 FOR FURTHER REQUIREMENTS.

3) RADIUS OF CURB VARIES AS FOLLOWS:

A) 25' RAD. LOCAL STREET WITH ALLEY.

B) 25' RAD. LOCAL STREET WITH LOCAL STREET.

C) 35' RAD. LOCAL STREET WITH THOROUGHFARE OR COLLECTOR.

D) 50' RAD. THOROUGHFARE WITH THOROUGHFARE

4) CURB RADIUS SHOULD BE A MINIMUM OF 50' WHERE INDUSTRIAL AND BUS TRAFFIC (5% OR MORE) IS ANTICIPATED ON LOWER CLASSIFICATION ROADWAYS.

5) BOTH LOCATION OPTIONS FOR HANDICAPPED RAMP ARE SHOWN. ENGINEER MAY SELECT EITHER, WHICHEVER FITS THE SITUATION.

NOTE: FOR COMPLETE HANDICAP, PUBLIC SIDEWALK AND CURB RAMP DETAILS, SEE F.D.O.T. DESIGN STANDARDS, 2006 EDITION, INDEX 304, SHEETS 1 THROUGH 6.

TOWN OF REDINGTON BEACH			HANDICAPPED RAMP SHEET 1	302.1
REV.BY	DATE			
		DATE OF APPROVAL		

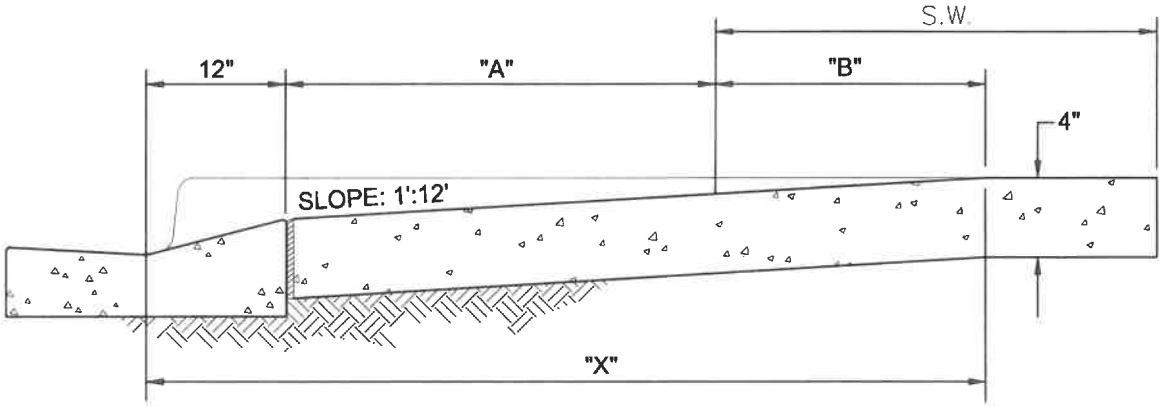

SECTION A-A

(SEE SHEET 301.0)

S.W.= SIDEWALK	"A"	S.W.+ A + 10"	"X"	"B"
5'	0	5.8'	5.8'	5'
6'	0	6.8'	6.8'	6'
7'	0	7.8'	7.3'	6.5'
8'	0	8.8'	7.3'	6.5'
5'	2'	7.8'	7.8'	5'
5'	2.5'	8.3'	8.1'	4.8'
5'	3'	8.8'	8.2'	4.4'
5'	3.5'	9.3'	8.4'	4.1'
5'	4'	9.8'	8.6'	3.8'
5'	4.5'	10.3'	8.7'	3.4'
5'	5'	10.8'	9.1'	3.1'

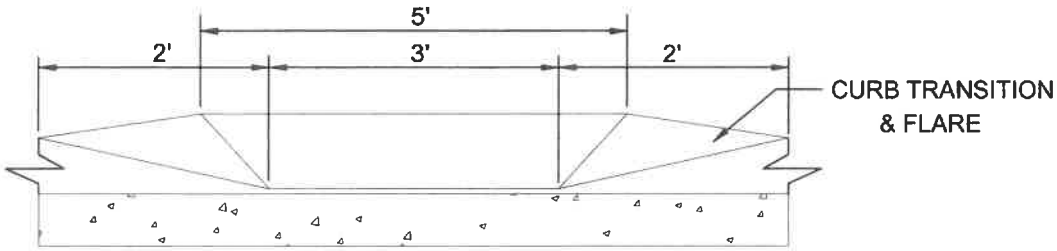

SECTION B-B

(SEE SHEET 301.0)

NOTE: FOR COMPLETE HANDICAP, PUBLIC SIDEWALK AND CURB RAMP DETAILS, SEE F.D.O.T. DESIGN STANDARDS, 2006 EDITION, INDEX 304, SHEETS 1 THROUGH 6.

TOWN OF REDINGTON BEACH			HANDICAPPED RAMP SHEET 2	302.2
REV.BY	DATE			
		DATE OF APPROVAL		

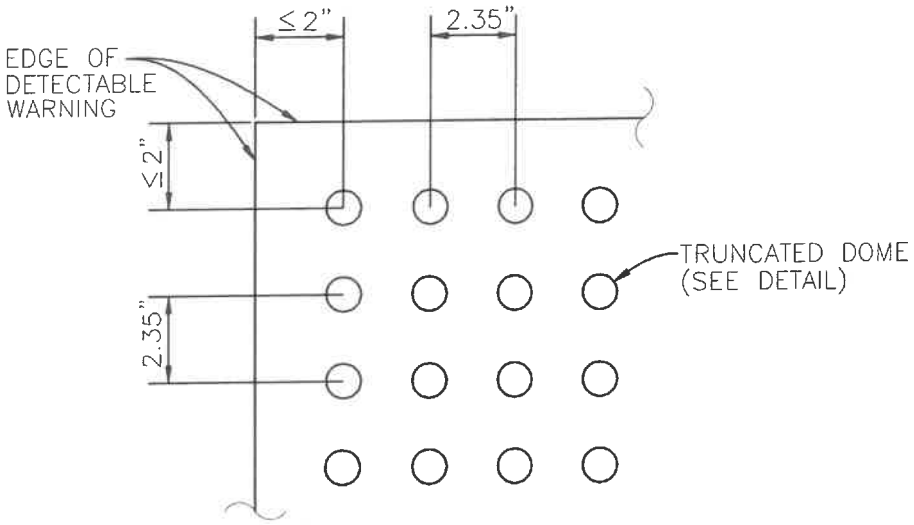

PLAN VIEW

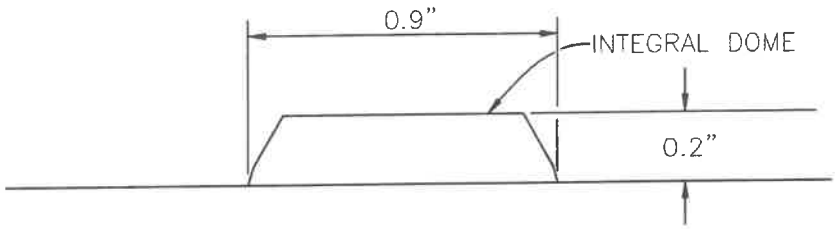

TRUNCATED DOME

CURB RAMP DETECTABLE WARNING DETAIL

NOTES:

DETECTABLE WARNINGS ON WALKING SURFACES

THE DETECTABLE WARNING SHALL EXTEND THE FULL WIDTH AND DEPTH OF THE CURB RAMP.

DETECTABLE WARNINGS SHALL CONSIST OF RAISED TRUNCATED DOMES WITH A DIAMETER OF NOMINAL 0.9 INCH, A HEIGHT OF NOMINAL 0.2 INCH AND A CENTER-TO-CENTER SPACING OF NOMINAL 2.35 INCH AND SHALL CONTRAST VISUALLY WITH ADJOINING SURFACES, EITHER LIGHT-ON-DARK, OR DARK-ON-LIGHT.

THE MATERIAL USED TO PROVIDE CONTRAST SHALL BE AN INTEGRAL PART OF THE WALKING SURFACE. DETECTABLE WARNINGS USED ON INTERIOR SURFACES SHALL DIFFER FROM ADJOINING WALKING SURFACES IN RESILIENCY OR SOUND-ON-CANE CONTACT.

THE MATERIAL USED TO PROVIDE CONTRAST SHOULD CONTRAST BY AT LEAST 70%. CONTRAST IN PERCENT IS DETERMINED BY:

$$\text{CONTRAST} = [(B1-B2)/B1] \times 100$$

WHERE B1 = LIGHT REFLECTANCE VALUE (LRV) OF THE LIGHTER AREA AND B2 = LIGHT REFLECTANCE VALUE (LRV) OF THE DARKER AREA.

NOTE THAT IN ANY APPLICATION BOTH WHITE AND BLACK ARE NEVER ABSOLUTE; THUS, B1 NEVER EQUALS 100 AND B2 IS ALWAYS GREATER THAN 0.

TOWN OF REDINGTON BEACH			CURB RAMP DETECTABLE WARNINGS	302.3
REV.BY	DATE			
		DATE OF APPROVAL		

ROAD STANDARD INDEX

	SHEET NO.
400 ROAD STANDARDS	400
A. GENERAL NOTES	
1. RESERVED	401.0
2. RESERVED	401.1
3. RESERVED	401.2
4. RESERVED	401.3
5. RESERVED	401.4
6. RESERVED	401.5
7. RESERVED	401.6
8. TYPICAL LOCAL RESIDENTIAL SWALE CROSSING	401.7
9. TYPICAL LOCAL RESIDENTIAL CURB CROSSING	401.8
10. TYPICAL LOCAL SHELL ROAD	401.9
11. RESIDENTIAL & INDUSTRIAL CUL-DE-SAC	401.10
12. RESIDENTIAL & INDUSTRIAL CUL-DE-SAC WITH MEDIAN	401.11
13. MINIMUM CURB RADIUS	402.0
14. MINIMUM CLEAR ZONE WIDTHS	402.1
15. MEDIAN REQUIREMENTS	402.2
16. LOCAL STREET TO THOROUGHFARE SEPARATION REQUIREMENTS	402.3
17. RESERVED	402.4
18. DRIVEWAY SETBACK DISTANCE	402.5
B. SOIL CEMENT SPECIFICATIONS	403.0
C. CEMENT TREATED BASE	403.1
D. UTILITY ROAD CUT REPLACEMENT	403.2
E. ROAD CONNECTION DETAIL	403.3
G. TYPICAL RESIDENTIAL STREET ROUNDABOUT	404.0
H. SPEED TABLE DETAIL	405.0

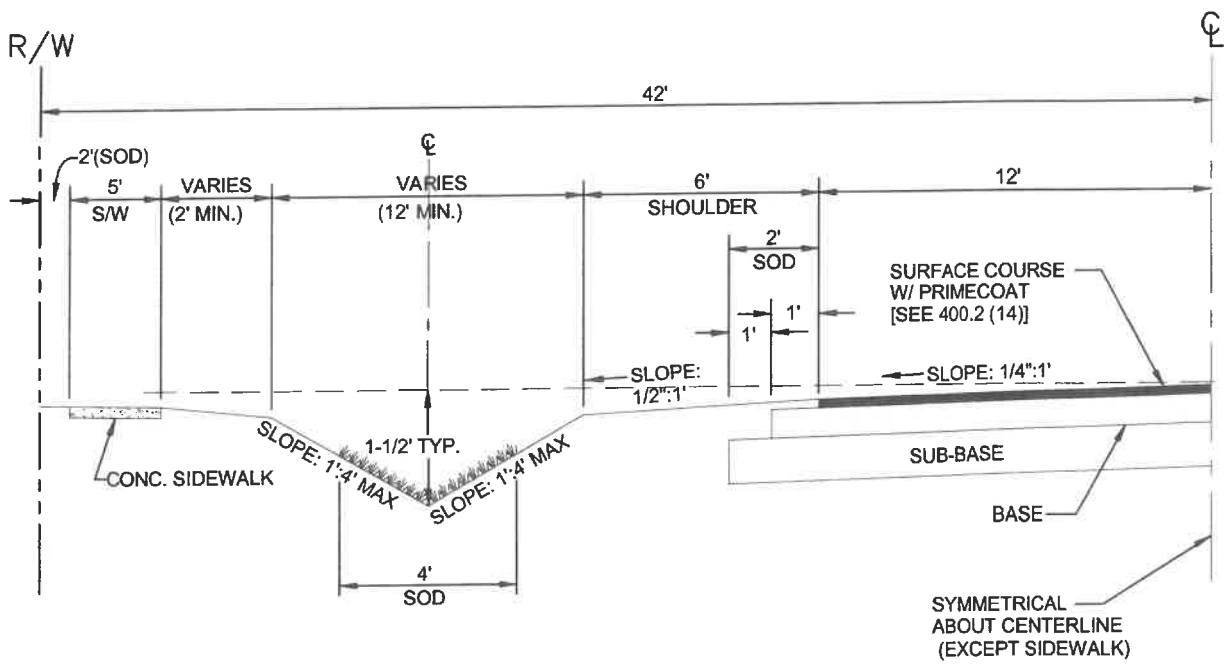

NOTES:

A) Asphaltic concrete surface course 1-3/4" minimum thickness (Type S). Two lifts of asphalt shall be considered acceptable, however a performance bond shall be required if second lift is delayed. The first lift shall be 1" of S-I, the second lift shall be 3/4" of S-III.

B) Base Course shall consist of 4-1/2" compacted sand asphalt (1200 lbs. stabilized), 6" base course 600 lbs. per square yard limrock compacted to 98% AASHTO T-180 density, or 6" soil cement* (6" Caloosahatchee Shell LBR 100).

C) 6" stabilized sub-base shell marl blended with sandy sub-base minimum LBR 40, 98% T180 AASHTO.

D) Shoulder, slopes and ditch bottom to have a minimum of 2" topsoil, bottom 4' of area to be sodded, and the balance is to be seeded and mulched per section 400.1 (8)

E) The slope of contiguous property may not exceed 1' to 4'.

F) 12" cover on storm sewers, no portion of pipe to be into sub-base.

G) Laboratory tests are required to substantiate structural section design. Specifications shown on this sheet are minimum.

* Or approved equal, meeting same structural number.

TOWN OF REDINGTON BEACH			LOCAL RESIDENTIAL SWALE CROSSING	401.7
REV.BY	DATE			
		DATE OF APPROVAL		

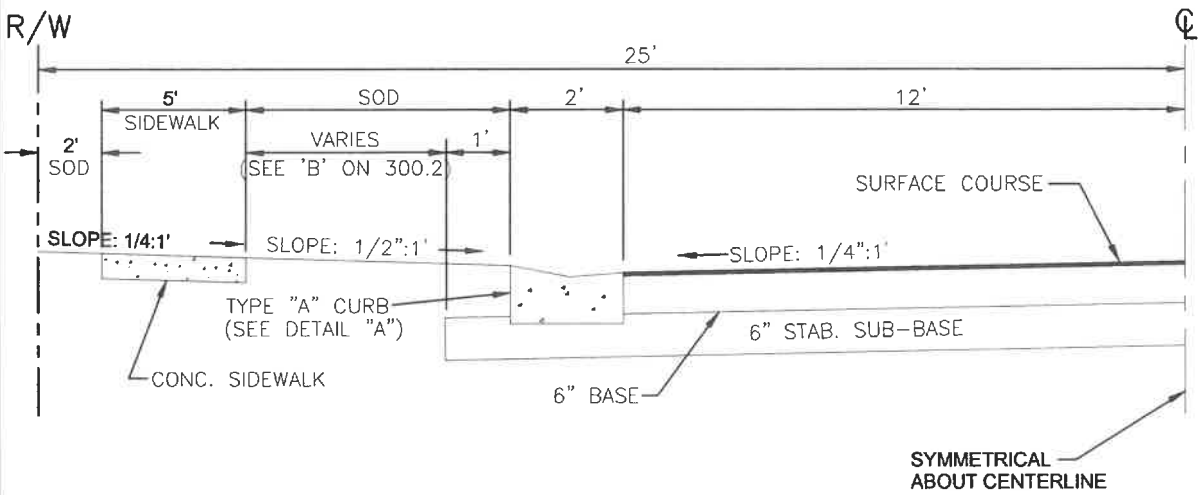

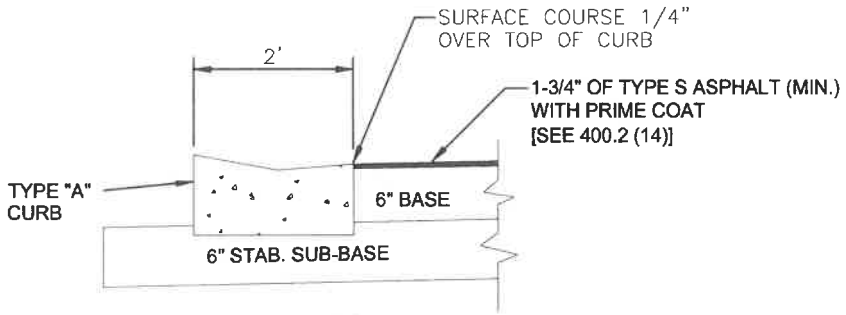

DETAIL "A"

NOTES:

A) Asphaltic concrete surface course shall be layed in two lifts. The first lift shall be 1" Type S-I or S-III. The second lift shall be 3/4" Type S-III. A performance bond shall be required if the second lift is delaved beyond acceptance of the road.

B) Base course shall consist of 4-1/2" compacted sand asphalt base (1200 lbs. stab.) or 6" Caloosahatchee shell compacted to 98% AASHTO T-180 density LBR 100 or 6" soil cement.*

C) 6" stabilized sub-base shell marl blended with sandy sub-grade minimum LBR 40, 98% T180 AASHTO.

D) On new construction, sanitary sewer may be placed on centerline of R/W if desired. All laterals to be installed at the same time as sanitary sewer main line.

E) See section 201.0 for curb and gutter types.

F) No portion of drainage pipe shall be allowed in sub-base. 12"minimum cover is required on storm drain.

G) Sidewalk shall be 1'or 2' inside R/W line, with 2' preferable. To be constructed per section 300.1

H) Laboratory tests are required to substantiate structural section design. Specifications shown on this sheet are minimum requirements.

I) If sidewalks are not required, only 2' of sod is required back of curb. Hydromulch balance of right-of-way.

J) Sodding shall be installed per section 400.1 (8)

* Or approved equal, meeting same structural number.

TOWN OF REDINGTON BEACH			LOCAL RESIDENTIAL CURB CROSSING	401.8
REV.BY	DATE			
		DATE OF APPROVAL		

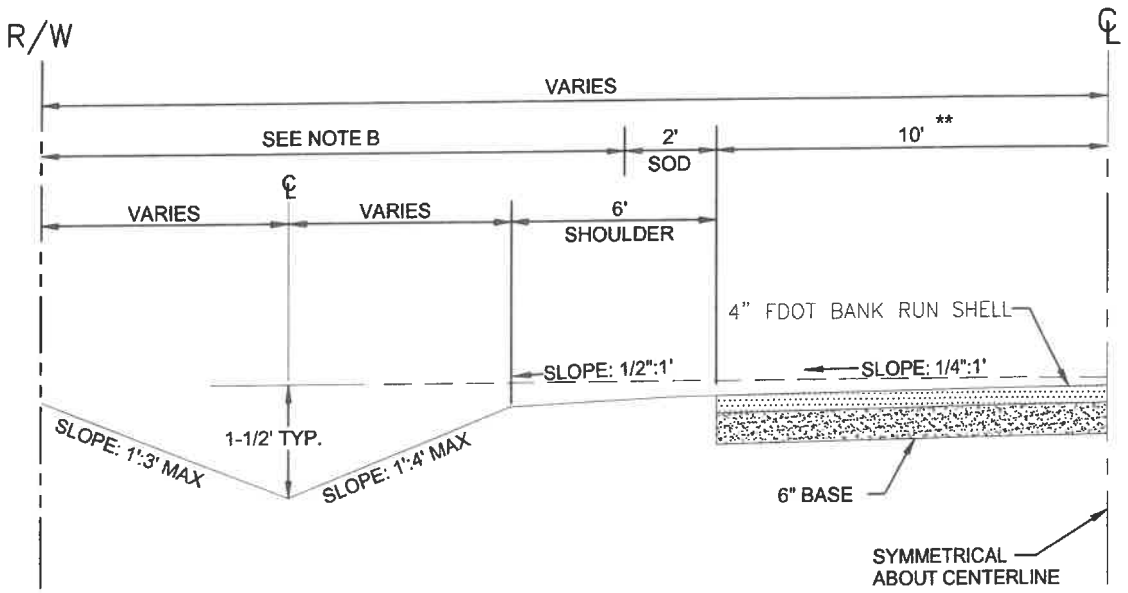

Note: These roads may only be approved for use in Ag-rural designated areas on rights-of-way dedicated prior to Oct. 15, 1990.
Roads will be classified as "Emergency Maintained Only."
Local residents are required to perform routine maintenance.

NOTES:

*A) Clean, stabilized 6" base. Minimum LBR 40, 98% T180 AASHTO. This requires raking and removal of plant material before compaction, if plant material exists within the right of way.

B) Road shall be finished with 4" FDOT bank run shell, then leveled and compacted.

C) Side 2' of road shoulder shall be sodded and if there is no substantial existing grass, remaining shoulder, slopes and ditch bottom shall have a minimum of 2" topsoil, and shall be seeded and mulched. Areas susceptable to erosion must be sodded.

D) The slope of contiguous property may not exceed 3' to 1'.

E) 12" cover on storm sewers, no portion of pipe allowed in base.

F) Laboratory tests are required to substantiate structural section design. Specifications shown on this sheet are minimum requirements.

* Or approved equal.

** Road may be 12' in width, (6' half width) on non-through roads (Dead Ends) serving 4 or fewer lots. Shoulders shall be a minimum of 6' in width and constructed of a stabilized or compacted soil with a minimum LBR OF 40.
The Transportation Director may allow variance to the road standards for certain circumstances.

** Road may be 16' in width (8' half width) on non-through roads (Dead Ends) serving 5 to 8 lots.

TOWN OF REDINGTON BEACH			LOCAL SHELL ROAD	401.9
REV.BY	DATE			
		DATE OF APPROVAL		

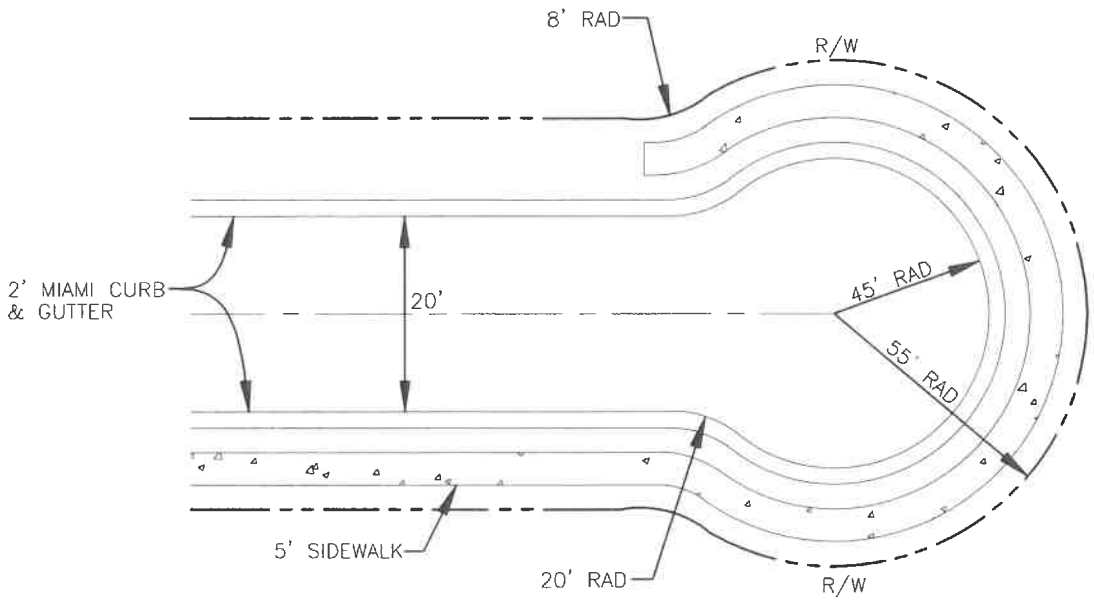

RESIDENTIAL CUL-DE-SAC

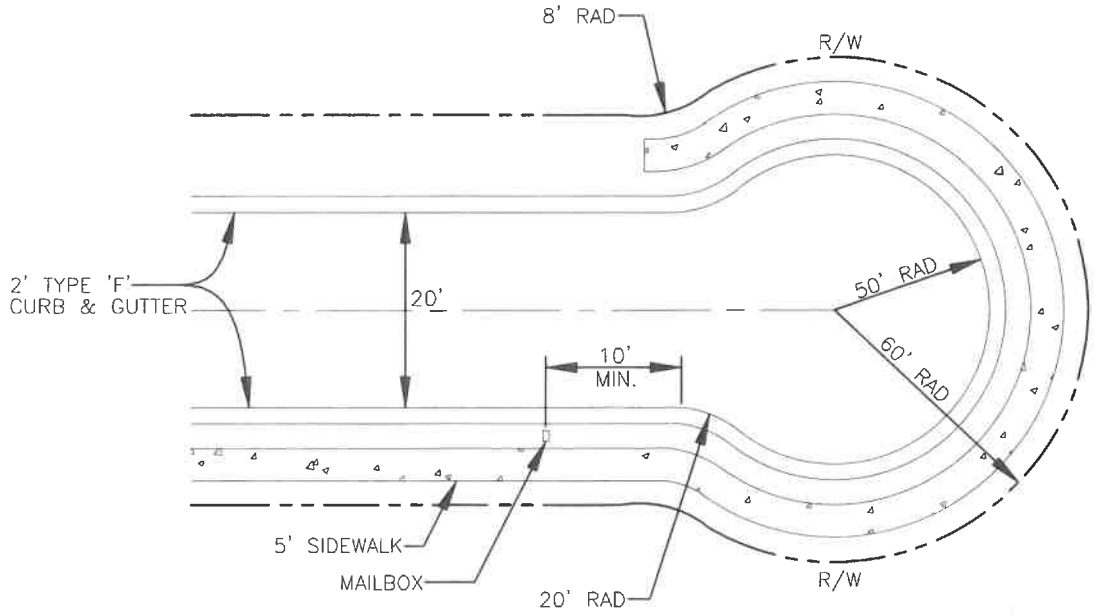

INDUSTRIAL CUL-DE-SAC

TOWN OF REDINGTON BEACH			RESIDENTIAL AND INDUSTRIAL CUL-DE-SAC	401.10
REV.BY	DATE			
		DATE OF APPROVAL		

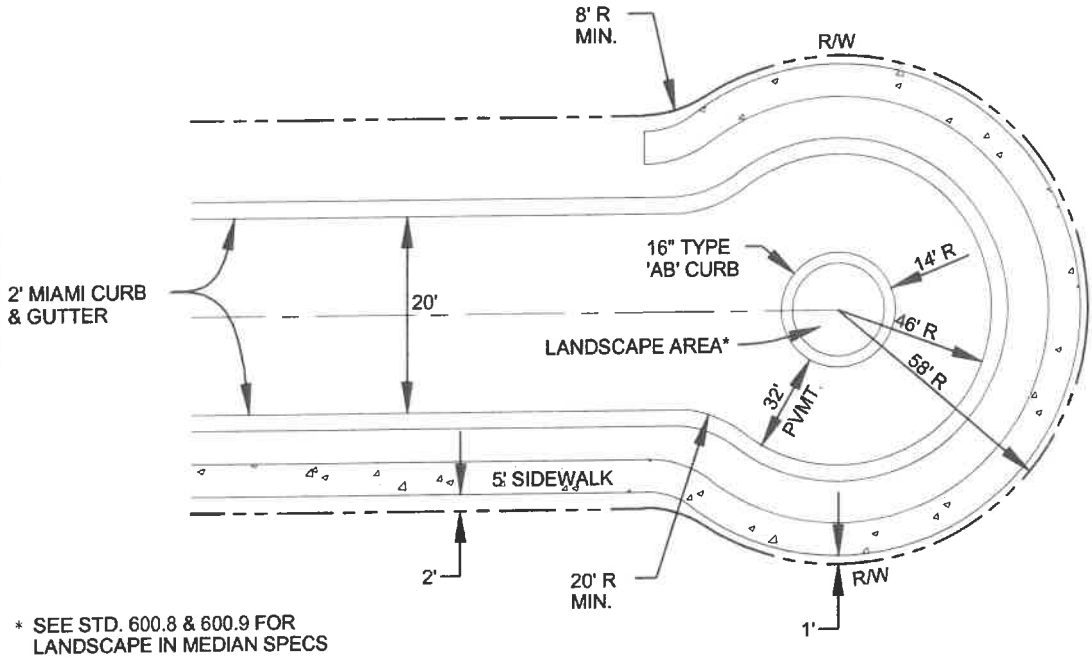

* SEE STD. 600.8 & 600.9 FOR LANDSCAPE IN MEDIAN SPECS

RESIDENTIAL CUL-DE-SAC

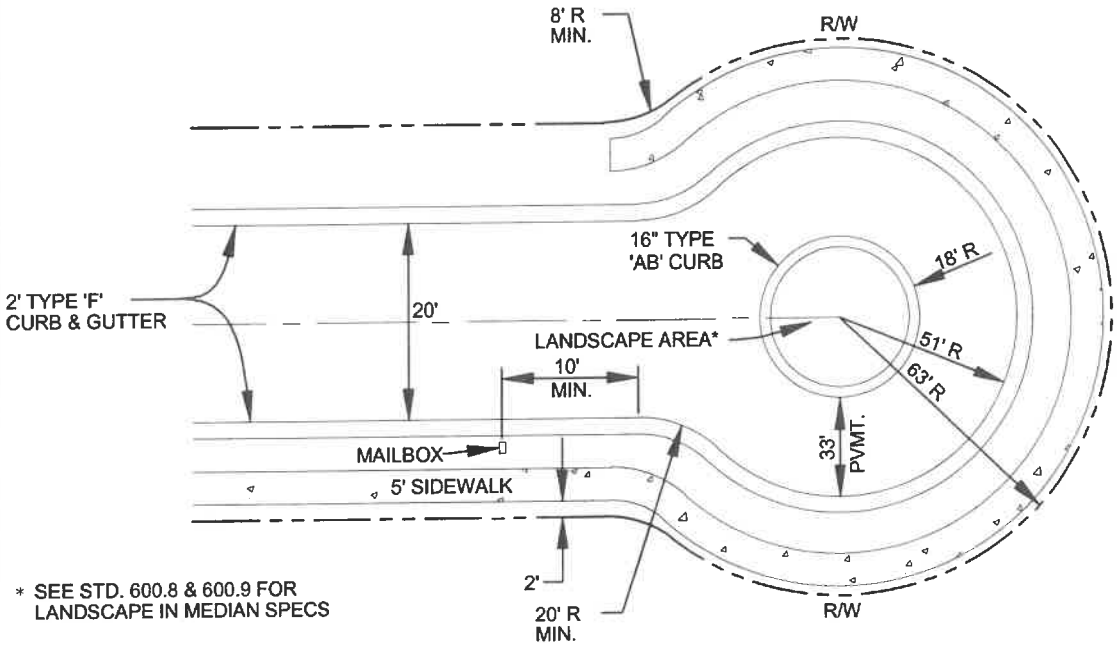

* SEE STD. 600.8 & 600.9 FOR LANDSCAPE IN MEDIAN SPECS

INDUSTRIAL CUL-DE-SAC

ALTERNATE:

TRUCK COLLAR DESIGN MAY BE USED BETWEEN RADIUS OF 16-1/2' AND 30' (SEE 404.2).

TOWN OF REDINGTON BEACH			RESIDENTIAL AND INDUSTRIAL CUL-DE-SAC WITH MEDIAN	401.11
REV.BY	DATE			
		DATE OF APPROVAL		

MINIMUM FACE OF CURB RADIUS FOR INTERSECTING ROADS

ROAD CLASSIFICATION

ROAD CLASSIFICATION	LOCAL RESIDENTIAL (URBAN & RURAL)	INDUSTRIAL (URBAN & RURAL)	MINOR COLLECTOR	MAJOR COLLECTOR	ARTERIAL
LOCAL RESIDENTIAL (URBAN & RURAL)	25'	40'	35'	35'	35'
INDUSTRIAL (URBAN & RURAL)	40'	50'	50'	50'	50'
MINOR COLLECTOR	35'	50'	50'	50'	50'
MAJOR COLLECTOR	35'	50'	50'	50'	50'
ARTERIAL	35'*	50'	50'	50'	50'

INCREASE PER MPO FREIGHT MANAGEMENT STUDY

* WITHOUT TURN LANE = 50'

TOWN OF REDINGTON BEACH

REV.BY	DATE

DATE OF APPROVAL

MINIMUM CURB RADIUS

402.0

MINIMUM WIDTH OF CLEAR ZONE

TYPE OF FACILITY	DESIGN SPEED (MPH)							
	25 AND BELOW	30	35	40	45	50	55	60 AND ABOVE
	MINIMUM CLEAR ZONE (FEET)							
RURAL •	6	6 LOCAL 10 COLLECTORS 14 ARTERIALS	6 LOCAL 10 COLLECTORS 14 ARTERIALS	10 COLLECTORS 14 ARTERIALS	14 ARTERIALS AND COLLECTORS ADT < 1500 18 ARTERIALS AND COLLECTORS ADT ≥ 1500	14 ARTERIALS AND COLLECTORS ADT < 1500 18 ARTERIALS AND COLLECTORS ADT ≥ 1500	18 ARTERIALS AND COLLECTORS ADT < 1500 24 ARTERIALS AND COLLECTORS ADT ≥ 1500	18 ARTERIALS AND COLLECTORS ADT < 1500 30 ARTERIALS AND COLLECTORS ADT ≥ 1500
URBAN *	$1\frac{1}{2}$	4 **	4 **	4 **	4 **	N/A ••	N/A ••	N/A ••

* FROM FACE OF CURB.

** ON PROJECTS WHERE THE 4' MINIMUM OFFSET CANNOT BE REASONABLY OBTAINED AND OTHER ALTERNATIVES ARE DEEMED IMPRACTICAL, THE MINIMUM MAY BE REDUCED TO 1-1/2'.

• USE RURAL FOR URBAN FACILITIES WHEN NO CURB AND GUTTER IS PRESENT. MEASURED FROM THE EDGE OF THROUGH TRAVEL LANE ON RURAL SECTION.

•• CURB AND GUTTER NOT TO BE USED ON FACILITIES WITH DESIGN SPEED > 45 MPH.

NOTE: ADT IN TABLE REFERS TO DESIGN YEAR ADT.

TOWN OF REDINGTON BEACH

REV.BY | DATE

DATE OF APPROVAL

MINIMUM CLEAR ZONE WIDTHS

402.1

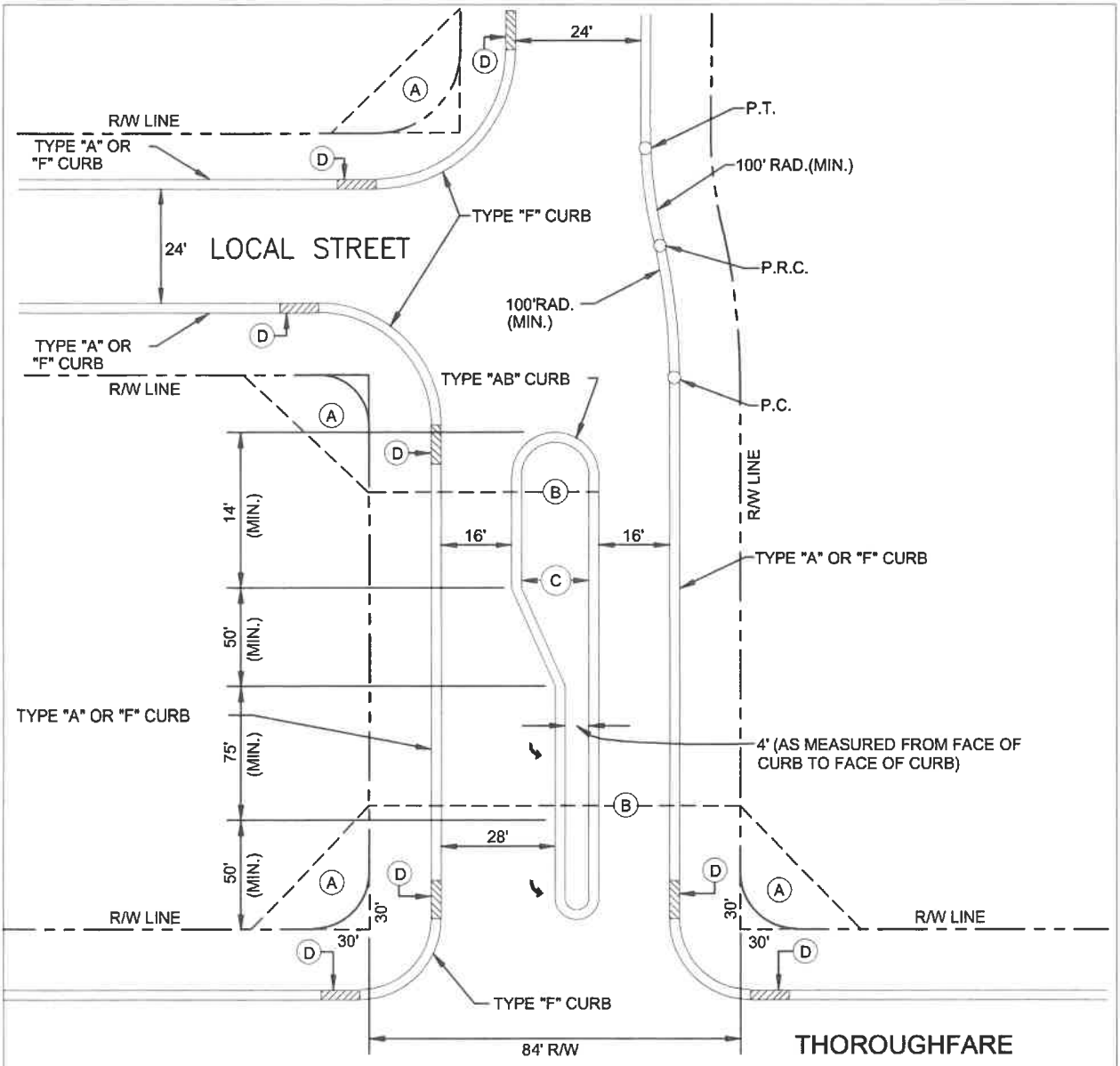

* (A) VISIBILITY TRIANGLE, 30' X 30' AREA PERMITTING NO OBSTRUCTION (1.0 FT. DIA. OR LESS) HIGHER THAN 2' NOR LOWER THAN 8.5', TO ASSURE PROPER VISIBILITY. (SEE L.D.C. 713).

(B) EXTENSION OF VISIBILITY TRIANGLE ACROSS MEDIAN STRIP TO COMPLY WITH STANDARD ABOVE.

(C) MEDIAN STRIP MINIMUM WIDTH 19.33' FROM BACK OF CURB TO BACK OF CURB, LENGTH - 300' MAX NOT EXTENDING BEYOND P.C. OF PAVEMENT INTERSECTION RADIUS OR R/W LINE OF INTERSECTING STREET.

(D) MINIMUM 5' CURB TRANSITION.

SEE SECTION 200 "CURB & GUTTER" SHEET 201.0 FOR CURB TYPE.

SEE SHEET 400.1 "GENERAL NOTES"

RADIUS AS REQUIRED BY ROAD DESIGNATION, LOCAL TO LOCAL 25' R., LOCAL TO THOROUGHFARE 35' R., THOROUGHFARE TO THOROUGHFARE 50' R.

* 30' IS A MINIMUM, MAY BE GREATER, VISIBILITY TRIANGLE TO BE DESIGNED PER F.D.O.T. MANUAL OF UNIFORM MINIMUM STANDARDS FOR DESIGN, CONST. & MAIN. FOR STREETS & HIGHWAYS (GREEN BOOK), LATEST REVISION.

TOWN OF REDINGTON BEACH			MEDIAN REQUIREMENTS	402.2
REV.BY	DATE			
		DATE OF APPROVAL		

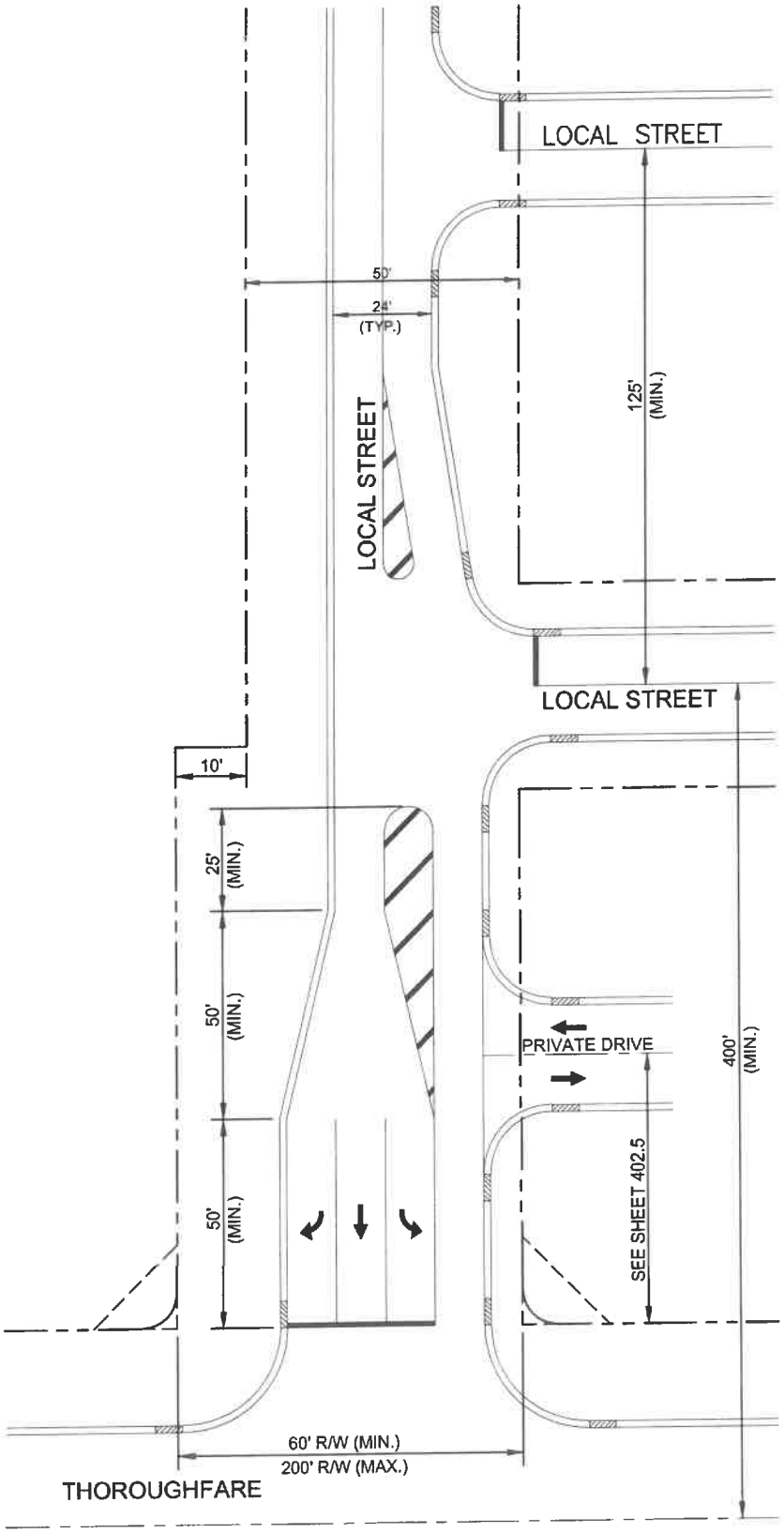

TOWN OF REDINGTON BEACH			LOCAL STREET TO THOROUGHFARE SEPARATION REQUIREMENTS	402.3
REV.BY	DATE			
		DATE OF APPROVAL		

DRIVEWAY SETBACK DISTANCE

PRINCIPAL USE OF LOT SERVICED	HIGHEST CLASSIFICATION OF INTERSECTING STREETS	MINIMUM REQUIRED DISTANCE (FEET)
RESIDENTIAL	ARTERIAL - THOROUGHFARE	60'
	MAJOR COLLECTOR - THOROUGHFARE	40'
	MINOR COLLECTOR - THOROUGHFARE	30'
	LOCAL	30'
ALL OTHER USES	ARTERIAL - THOROUGHFARE	75'
	MAJOR COLLECTOR - THOROUGHFARE	60'
	MINOR COLLECTOR - THOROUGHFARE	50'
	LOCAL	50'

SOIL CEMENT SPECIFICATIONS

1. DESIGN MIX:

A.) 300 P.S.I. (7 DAYS) LAB DESIGN.

B.) CEMENT CONTENT BY WEIGHT MUST BE A MINIMUM OF 5% AND A MAXIMUM OF 8%.

C.) SOIL, CEMENT AND WATER SHALL BE CENTRAL PLANT MIX ONLY.

2. PROJECT TEST SAMPLES:

A.) THE PILLS CAST FROM PROJECT OPERATIONS MUST BREAK AT 200 P.S.I. OR HIGHER AT 7 DAYS.

B.) CORES MAY BE TAKEN AT 14 DAYS TO PROVIDE ADDITIONAL INFORMATION REGARDING A SOIL CEMENT SECTION.

C.) CORE BREAKS BELOW 150 P.S.I. WILL NOT BE ACCEPTABLE.

D.) IN PLACE DENSITY TESTS SHALL BE MADE IN THE SUB-BASE AND BASE COURSE. FREQUENCY OF TESTING SHALL BE AT LEAST ONE TEST FOR EVERY 500 L.F. OF PAVEMENT. IF PROJECT IS LESS THAN 500 L.F., THEN A MINIMUM OF TWO DENSITY TESTS SHALL BE TAKEN.

E.) ALL CORES SHALL BE 6" DIAMETER.

F.) SUB-BASE TO BE A MINIMUM OF LBR 40 (UNLESS OTHERWISE NOTED).

3. CONSTRUCTION METHODS:

A.) CONSTRUCTION METHODS SHALL IN ACCORDANCE WITH F.D.O.T. STANDARD SPECIFICATIONS FOR ROAD AND BRIDGE CONTRUCTION, 2000 EDITION, SECTION 270 EXCLUDING SUB-SECTION 270-4.3.1 ("MIX IN PLACE"). ALL OTHER SUB-SECTIONS OF SECTION ARE APPLICABLE.

*NOTE: SOIL CEMENT CAN ONLY BE USED WITH SPECIFIC APPROVAL OF DIRECTOR.

TOWN OF REDINGTON BEACH			SOIL CEMENT SPECIFICATIONS	403.0
REV.BY	DATE			
		DATE OF APPROVAL		

CEMENT TREATED BASE CONSTRUCTION

GENERAL:

1.1 THE CONSTRUCTION OF THE CEMENT TREATED BASE SHALL IN ACCORDANCE WITH F.D.O.T. STANDARD SPECIFICATIONS FOR ROAD AND BRIDGE CONSTRUCTION, 2000 EDITION, SECTION 270 EXCLUDING SUB-SECTION 270-4.3.1 ("MIX IN PLACE"). ALL OTHER SUB-SECTIONS OF SECTION ARE APPLICABLE.

1.2 THE SUBGRADE IS TO BE CONSTRUCTED TO F.D.O.T. SPECIFICATION SECTION 270-4, 2000 EDITION AND BE COMPACTED TO 98 PERCENT AASHTO T-180 DENSITY. THE SUB-BASE TO BE CONSTRUCTED OF MATERIAL HAVING A MINIMUM LBR OF 40.

1.3 THE CEMENT TREATED BASE IS TO HAVE A MINIMUM LABORATORY CURED FIELD MIX 7-DAY COMPRESSIVE STRENGTH OF 200 PSI, BY BAG SAMPLE.

1.4 SHELL MATERIAL SHALL BE MIXED WITH A MINIMUM CEMENT CONTENT BY WEIGHT OF 2%, BUT NOT TO EXCEED 4%. THE INTENT OF A 2% MIX IS NOT PRIMARILY TO GENERATE STRENGTH BUT TO ENHANCE A SHELL BASE WITH THE RESILENCY AND WATER RESISTANCE CHARACTERISTICS OF SOIL CEMENT, WITHOUT GENERATING THE PROBLEMATIC CRACKING CHARACTERISTICS GENERALLY ASSOCIATED WITH NORMAL SOIL CEMENT MIXES. THEREFORE, THE CONTRACTOR IS INSTRUCTED TO GENERATE A MIX CAPABLE OF ACHIEVING A FIELD TEST 7-DAY COMPRESSIVE STRENGTH IN THE RANGE OF 200 PSI TO 300 PSI, BY BAG SAMPLE.

1.5 BASE MATERIAL SHALL BE F.D.O.T. SHELL AND HAVE A MINIMUM LBR OF 100 AND +/-2% OPTIMUM MOISTURE PRIOR TO MIXING WITH CEMENT.

1.6 ANY AREA REPRESENTED BY A 400 PSI 7-DAY BREAK OR GREATER IS SUBJECT TO REJECTION BY THE OWNER OR OWNER'S REPRESENTATIVE AFTER OBSERVATION, EVALUATION AND TESTING. VALUES FROM 300 PSI TO 400 PSI SHALL BE SUBJECT TO REVIEW AND COMPARISON TO THE DESIGN MIX.

1.7 IT SHOULD BE NOTED THAT MOISTURE CONTENT, RAPIDITY OF COMPACTION EFFORT AND FINAL COMPACTION RESULTS HAVE AS MUCH, IF NOT MORE, INFLUENCE ON THE COMPRESSIVE STRENGTH AS DOES THE CEMENT CONTENT. IN ORDER TO GIVE THE CONTRACTOR A REFERENCED ACCEPTANCE STANDARD, LOWER AND UPPER VALUES OF 200 PSI AND 300 PSI HAVE BEEN ESTABLISHED. THESE VALUES ARE ALSO GIVEN SOME SUBJECTIVE LEEWAY IN THE INSPECTION OF THE FINAL PRODUCT.

1.8 ALL MATERIAL SHALL BE COLLECTED BY THE SACK METHOD, TRANSPORTED TO LAB IN SEALED/MOISTURE RETAINING ENCLOSURE AND TESTED WITHIN 2 HOURS OF FIELD SAMPLING.

TESTING AND INSPECTION:

2.1 ALL TESTING AND INSPECTION SHALL BE PERFORMED BY AN INDEPENDENT LABORATORY APPROVED BY THE ENGINEER/COUNTY.

2.2 THE CONTRACTOR SHALL MAKE AVAILABLE ALL MATERIALS TO THE LABORATORY FOR THE PURPOSE OF PERFORMING ROUTINE TESTS AS SPECIFIED. THIS INCLUDES SAMPLES FOR CEMENT TREATED BASE MIXTURE DESIGN, MAXIMUM DENSITY DETERMINATION, SIEVE ANALYSIS OR OTHER TESTS AS DIRECTED BY THE ENGINEER.

2.3 THE PILLS CAST FROM PROJECT OPERATIONS MUST BREAK AT 200 PSI OR HIGHER AT 7 DAYS.

2.4 TEST SAMPLES MAY BE TAKEN AT 14 DAYS TO PROVIDE ADDITIONAL INFORMATION REGARDING A CEMENT TREATED SECTION. SAMPLES SHALL BE SAWCUT, FULL DEPTH AND BE A MINIMUM OF 12"x12".

2.5 SAMPLE BREAKS BELOW 150 PSI WILL NOT BE ACCEPTABLE. ALL CORES SHALL BE 6 INCHES IN DIAMETER.

2.6 IN PLACE DENSITY TESTS SHALL BE MADE IN THE SUB-BASE AND BASE COURSE. FREQUENCY OF TESTING SHALL BE AT LEAST ONE TEST FOR EVERY 500 L.F. OF PAVEMENT. IF PROJECT IS LESS THAN 500 L.F., THEN A MINIMUM OF TWO DENSITY TESTS SHALL BE TAKEN. A MINIMUM OF TWO STRENGTH TEST VALUE SPECIMENS SHALL BE TAKEN EACH DAY (ONE IN THE MORNING, AND ONE IN THE AFTERNOON)

2.7 TEST RESULTS SHALL BE REPORTED IN WRITING TO THE COUNTY.

2.8 F.D.O.T. SHELL BASE MATERIALS WILL BE ONLY BASE MATERIAL ACCEPTED.

2.9 CRUSHED CONCRETE BASE MATERIAL REQUIRES DIRECTOR'S APPROVAL.

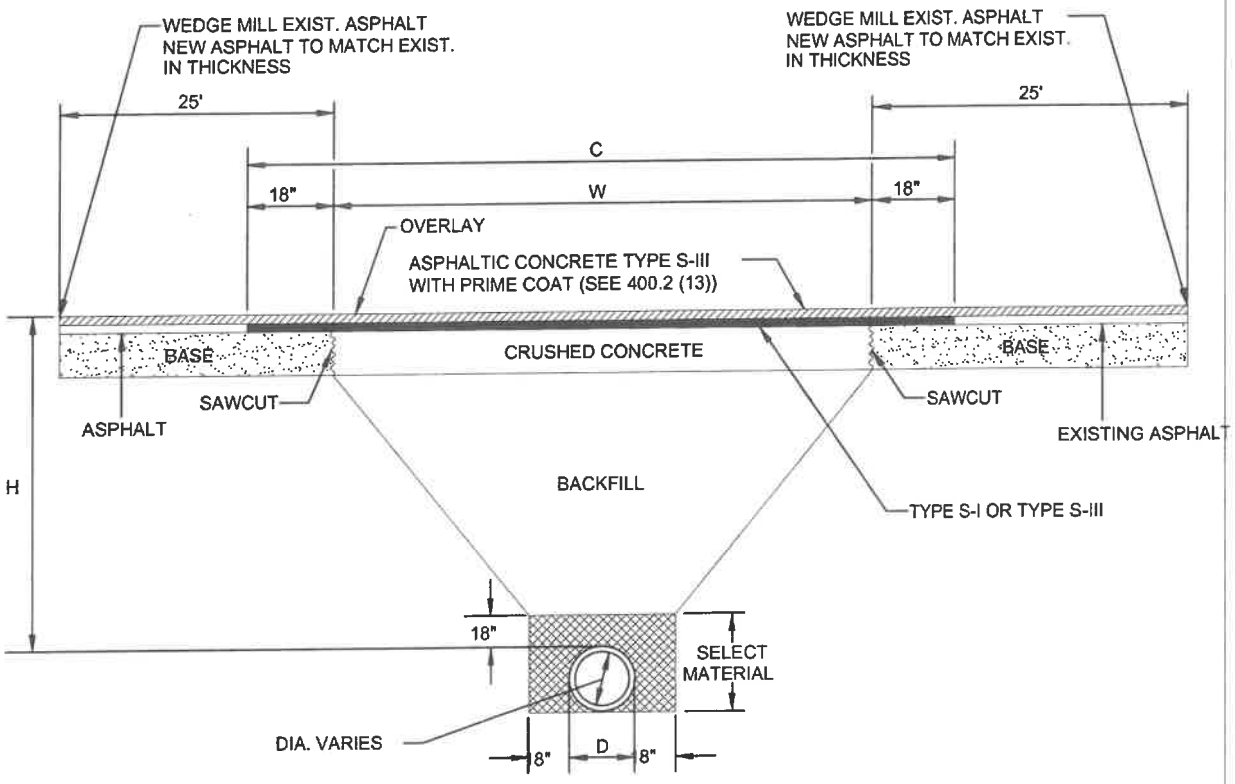

A. CRUSHED CONCRETE BASE SHALL BE A MINIMUM OF 8" THICK AND A MINIMUM OF "W" IN WIDTH, OR GREATER, WHERE DISTURBED AREA IS GREATER THAN "W" FROM EQUATION: W=(2 X H) + D + (2 X 18"). SAND ASPHALT BASE WILL BE AN ACCEPTABLE ALTERNATE.

B. BACKFILL, AASHTO M145-66 SHALL BE PLACED IN LAYERS NOT TO EXCEED 6", EACH LAYER WILL BE THOROUGHLY TAMPED AND/OR ROLLED TO 98% OF MODIFIED PROCTOR MAXIMUM DENSITY (AASHTO T-180). NON-SHRINK, HIGH SLUMP, 1,500 PSI CONC. BACKFILLL MAY BE USED AS AN ALTERNATIVE IF APPROVED BY TRANSPORTATION DEPARTMENT.

C. SELECT MATERIAL, AASHTO M-146-70, SHALL BE PLACED ON BOTH SIDES OF THE PIPE SIMUTANEOUSLY, COMPACT AREA UNDER HAUNCHES OF THE PIPE W/ MECHANICAL TAMPERS, AND THROUGHOUT THE REMAINDER OF THE SELECT MATERIAL.

D. ASPHALTIC CONCRETE FRICTION COURSE, SHALL BE THE SAME DEPTH AND TYPE AS EXISTING OR A MINIMUM OF ONE INCH, WHICHEVER IS GREATER. C = W+36

E. "H" = THE DEPTH FROM TOP OF PIPE TO THE CENTERLINE OF THE ROAD (MINIMUM OF 36") MINIMUM OF 30" UNDER FLOWLINE OF SIDE DITCHES.

F. RESTORE EXISTING SIGNAGE & MARKING WITH THERMOPLASTIC PER F.D.O.T. STANDARDS.

TOWN OF REDINGTON BEACH			UTILITY ROAD CUT REPLACEMENT	403.2
REV.BY	DATE			
		DATE OF APPROVAL		

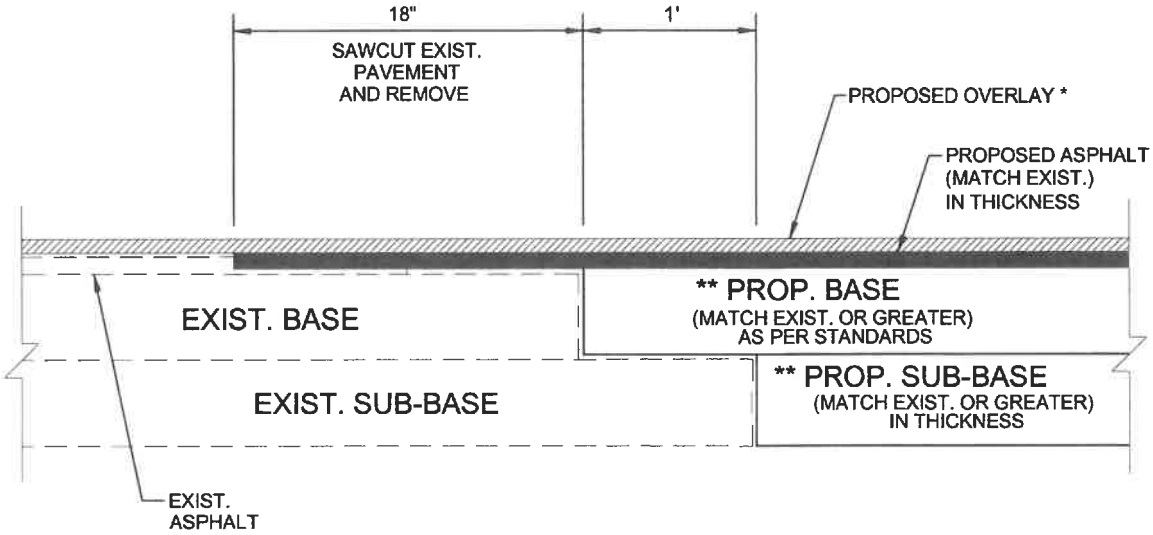

* NOTE: LIMITS OF OVERLAY - EDGE OF PAVEMENT TO EDGE OF PAVEMENT AND 25' BEYOND LIMITS OF CONSTRUCTION.

** NOTE: CONNECTION TO OLDER (SUBSTANDARD THICKNESS) ROADS MAY REQUIRE THICKER PROPOSED BASE AND SUB-BASE TO MEET CURRENT STANDARDS.

SIGNAGE AND MARKING PLAN SHALL ACCOMPANY CONSTRUCTION PLAN.

ROAD CONNECTION DETAIL

N.T.S.

(NEW CONSTRUCTION TO EXISTING FOR WIDENING OR EXTENSION)

TOWN OF REDINGTON BEACH			ROAD CONNECTION DETAIL	403.3
REV.BY	DATE			
		DATE OF APPROVAL		

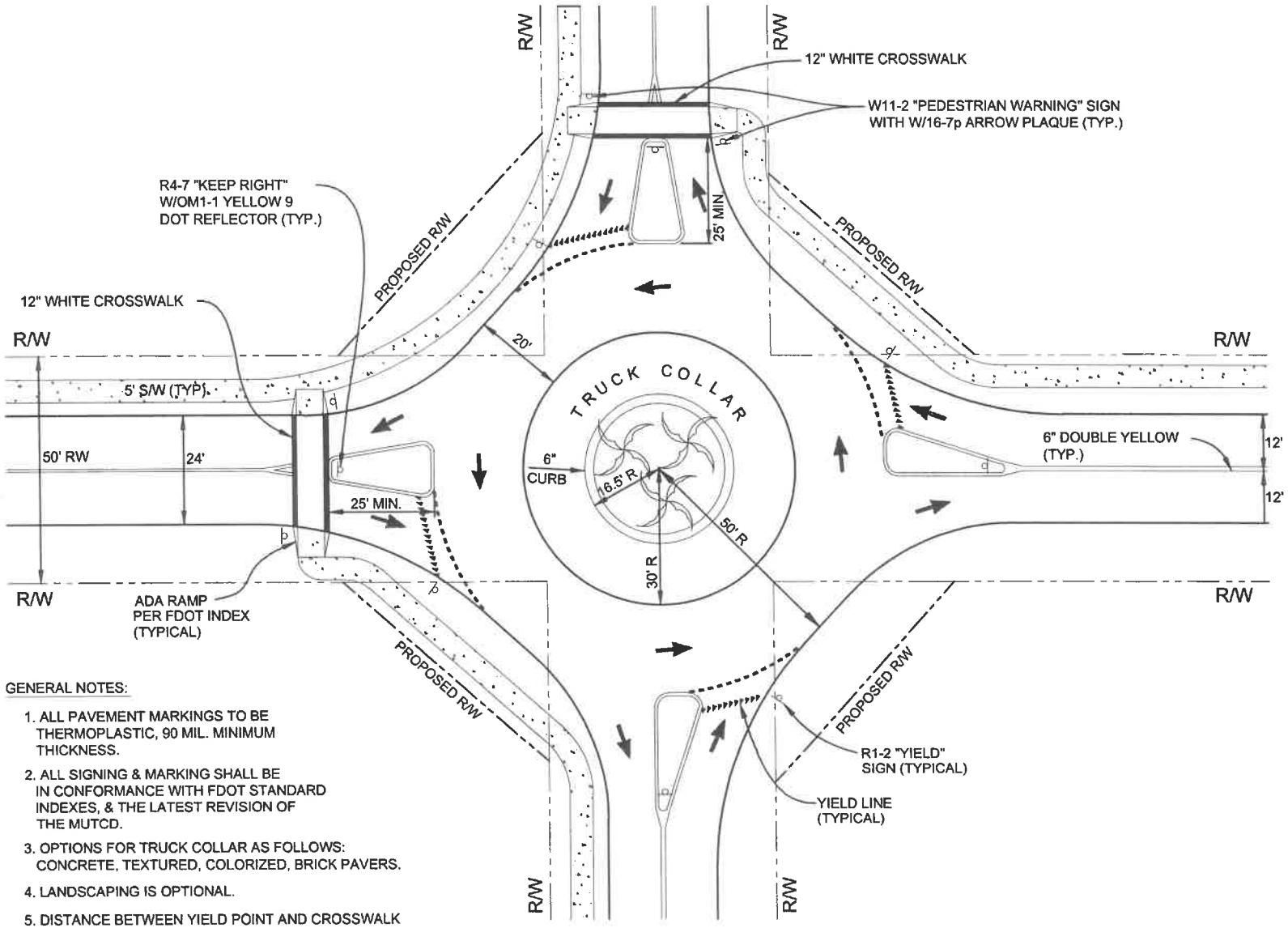

GENERAL NOTES:

1. ALL PAVEMENT MARKINGS TO BE THERMOPLASTIC, 90 MIL. MINIMUM THICKNESS.
2. ALL SIGNING & MARKING SHALL BE IN CONFORMANCE WITH FDOT STANDARD INDEXES, & THE LATEST REVISION OF THE MUTCD.
3. OPTIONS FOR TRUCK COLLAR AS FOLLOWS: CONCRETE, TEXTURED, COLORIZED, BRICK PAVERS.
4. LANDSCAPING IS OPTIONAL.
5. DISTANCE BETWEEN YIELD POINT AND CROSSWALK IS 25' MINIMUM.

TOWN OF REDINGTON BEACH

REV.BY	DATE

DATE OF APPROVAL

TYP. ROUNDABOUT FOR LOCAL & RESIDENTIAL STREETS

404.0

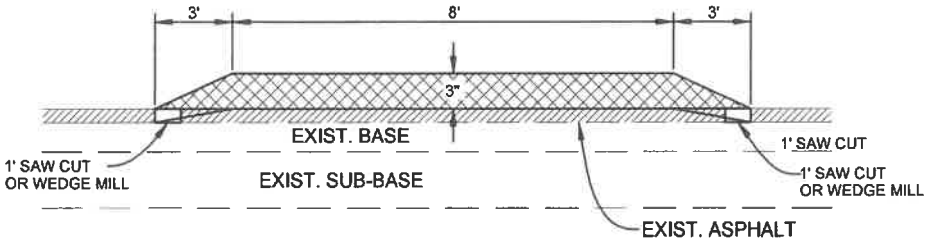

SECTION A-A

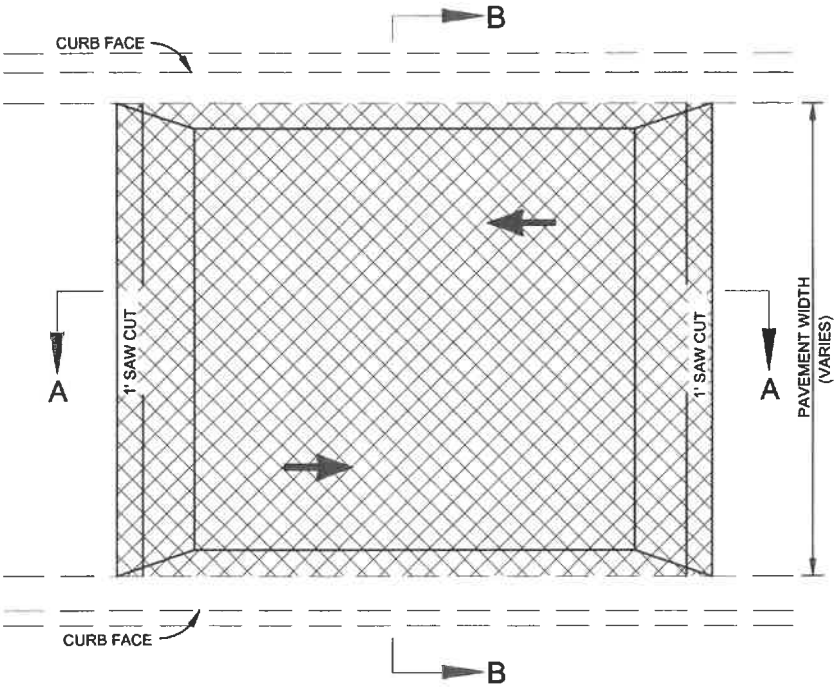

PLAN VIEW

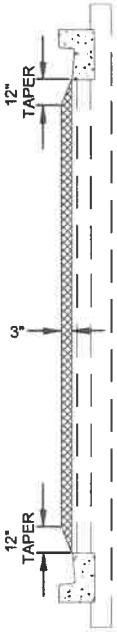

SECTION B-B

NOTE: ALL PAVEMENT MARKINGS PER MUTCD.
DETAIL IS FOR APPLICATION TO EXISTING ROAD.

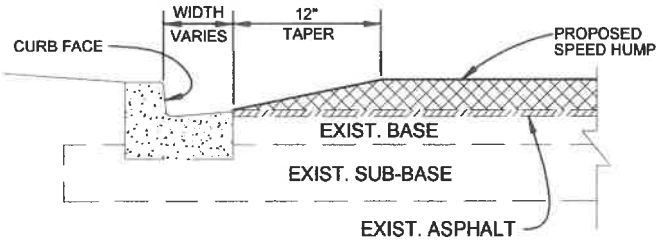

SPEED HUMP TAPER AT CURB

TOWN OF REDINGTON BEACH			SPEED TABLE DETAIL	405.0
REV.BY	DATE			
		DATE OF APPROVAL		

INDEX

	SHEET NO.
500 TRAFFIC SIGNAL SUPPLEMENTAL SPECIFICATIONS	500.0
1) INDEX SHEET	500.1
2) RESERVED	500.2
3) RESERVED	501.0
4) RESERVED	502.0-502.4
5) RESERVED	503.0
6) RESERVED	504.0-504.2
7) RESERVED	505.0
8) RESERVED	506.0
9) RESERVED	507.0
10) RESERVED	508.0
11) RESERVED	509.0-514.0
12) RESERVED	515.0
13) RESERVED	516.0
14) RESERVED	517.0
15) RESERVED	518.0-521.0
16) RESERVED	522.1-522.6
17) RESERVED	523.0-523.6
18) RESERVED	551.0
19) RESERVED	552.0
20) STREET NAME SIGNING (GROUND MOUNTED) HARDWARE/MATERIALS SPECIFICATIONS	553.0-3
21) RESERVED	554.0
22) RESERVED	555.0
23) RESERVED	556.0
24) RESERVED	557.0
25) RESERVED	557.1

FIGURE 553-A

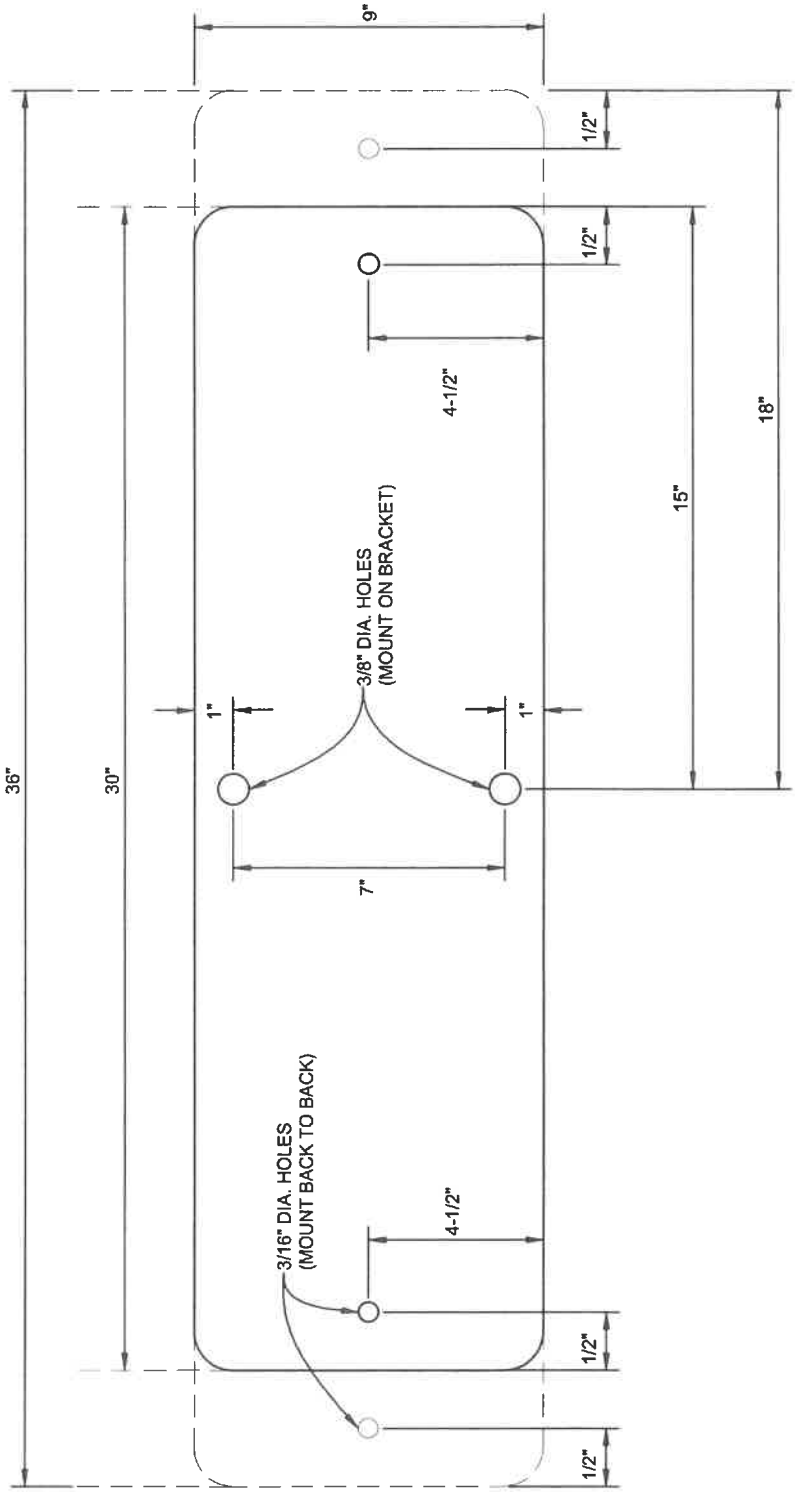

ALUMINUM STREET NAME SIGN BLANK

TOWN OF REDINGTON BEACH			STREET NAME SIGNS (GROUND MOUNTED) HARDWARE/MATERIAL SPECIFICATIONS	553.2
REV.BY	DATE			
		DATE OF APPROVAL		

FIGURE 553-B

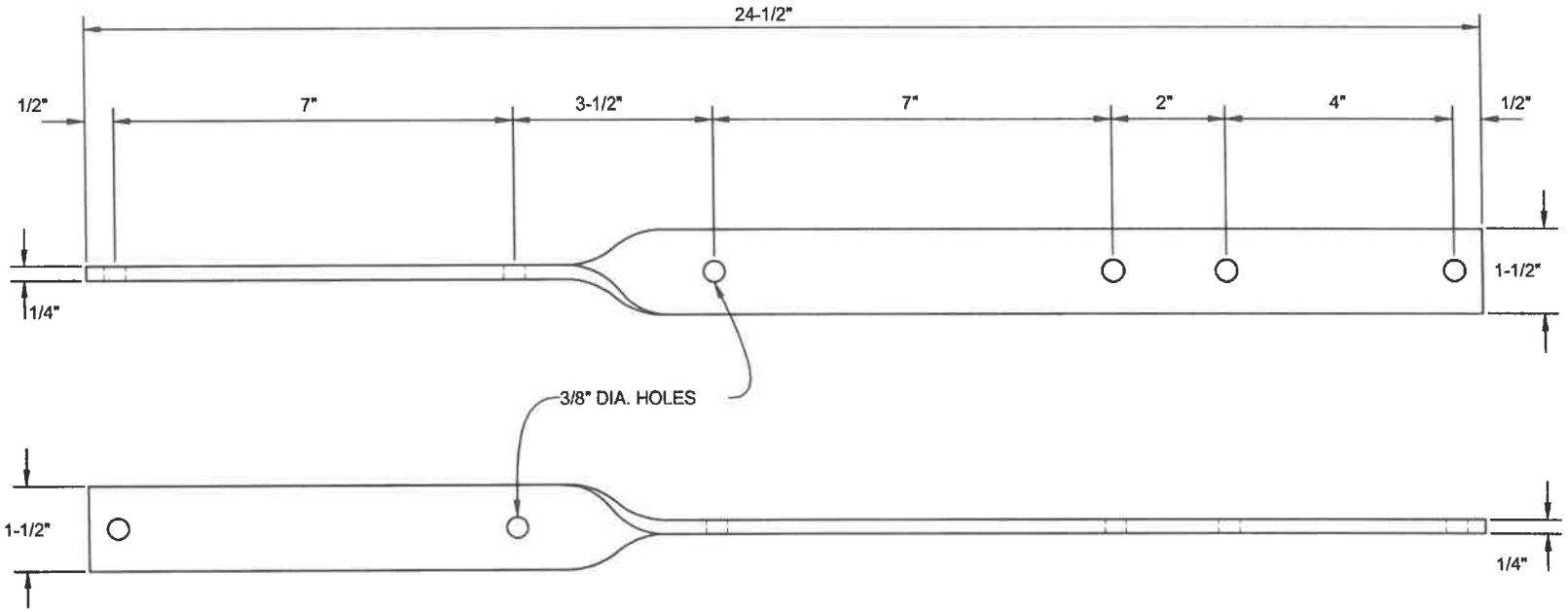

GALVANIZED STEEL STREET NAME SIGN BRACKET

TOWN OF REDINGTON BEACH	REV.BY	DATE
DATE OF APPROVAL		

STREET NAME SIGNS
(GROUND MOUNTED)
HARDWARE/MATERIAL
SPECIFICATIONS

553.3

WASTOP VALVE INDEX

	SHEET NO.
600 WASTOP VALVES	600.0
A. WASTOP INSTALLATION, GENERAL NOTES	601.0
B. WASTOP INSTALLATION, GENERAL NOTES CONTINUED	601.1
C. WASTOP INSTALLATION, GENERAL NOTES CONTINUED	601.2
D. WASTOP INSTALLATION, GENERAL NOTES CONTINUED	601.3
E. WASTOP VALVE INSTALLATION PREPARATION	602.0
F. WASTOP VALVE GENERAL INFORMATION	603.0
G. WASTOP VALVE INSTALL INLET INTO CHAMBER	604.0
H. WASTOP VALVE INSTALL OUTLET FROM CHAMBER	605.0
I. WASTOP VALVE FLEXIBLE COUPLING INSTALL	606.0
J. WASTOP VALVE FLANGE INSTALLATION	607.0
K. WASTOP VALVE PVC INLINE INSTALLATION	608.0

WASTOP DETAILED INSTRUCTIONS

The following Installation Guide is designed to provide the customers of Wapro with sufficient information to successfully install our WaStop check valve. Typically, our customers were provided with Shop Drawings prior to manufacture for both review and authorization to manufacture. These documents alone, however, may not provide all the guidance needed to install the WaStop.

Orientation

The WaStop should always be installed with the 'spine' of the membrane upwards. Depending on the dimension the WaStop could be pushed in place by hand or using lifting equipment and slings.

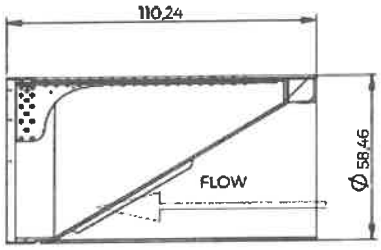

Fastener

Wapro recommends the use of concrete anchor bolts or threaded rods secured with chemical anchors. Bolted into the non-shrink grout, or concrete surrounding the WaStop valve body.

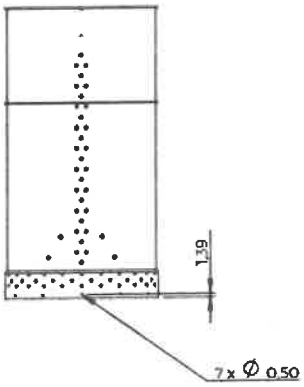

Sealant

A WaStop secured by expansion bolts through the pre-drilled holes in the bell of the WaStop is sealed by applying non-shrink grout between the id of the host pipe and the od of the WaStop valve body.

TOWN OF REDINGTON BEACH			WASTOP INSTALLATION GENERAL NOTES	601
REV.BY	DATE			
		DATE OF APPROVAL		

Installation

This section aims to outline the steps of the installation method when the WaStop is sealed by non-shrinking grout and secured with concrete anchors. WaPro supplies neither grout nor anchors and the respective manufacturers recommendation should be followed.

The steps installing a WaStop with this method are:

1) Clean out the host pipe and inspect for irregularities.
2) Position the WaStop: flow direction as well as 'this side up' is noted on the label of the WaStop.
3) Apply non-shrink grout underneath the WaStop using spacers to create about 1" space between the WaStop and the host pipe, remove the spacer and fil up the rest of the area around the WaStop and allow the grout to set. It is recommended to form at least a 10" long 1/2" thick lining around the WaStop with grout. Mixing the grout to a semi-solid to plastic consistency will ease application.
4) Once the grout has set, secure the WaStop utilizing concrete anchor bolts.

If the bolts can be anchored in place prior to applying grout it's recommended to do so. It will allow for a thrust nut to be used providing an adjustable surface against which the valve body will rest. Adjust the nut leaving about ½" space between the valve body and the host pipe before applying the grout.

Installation method using flange or angle brackets for grooved pipes.

Introduction

The following Installation Guide is designed to provide the customers of Wapro with sufficient information to successfully install our WaStop check valve. Typically, our customers were provided with Shop Drawings of their WaStops prior to manufacture for both review and authorization to manufacture. These documents alone, however, may not provide all the guidance needed to install the WaStop.

The WaStop

Regardless of dimension all WaStop share some features, and there are two main methods of installing a WaStop in grooved pipes; inside the pipe with angle brackets and sealant or with a flange. The dimension of the bolt holes is noted on the shop drawings.

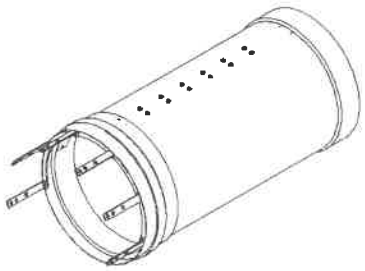

fig 1. Angle brackets and rubber seal.

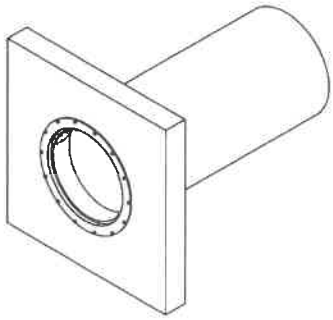

fig 2. Flange

TOWN OF REDINGTON BEACH			WASTOP INSTALLATION GENERAL NOTES	601.1
REV.BY	DATE			
		DATE OF APPROVAL		

Orientation
The WaStop should always be installed with the 'spine' of the membrane upwards. Depending on the dimension the WaStop could be pushed in place by hand or using lifting equipment and slings.

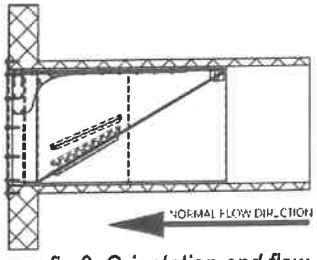

fig 3. Orientation and flow direction.

Fastener
Wapro recommends the use of concrete anchor bolts or threaded rods secured with chemical anchors when flange is used. Different applications might warrant other fasteners.
Wapro recommends bolted connection trough the grooved pipe when fastening inside the grooved pipe using angle brackets. Material of the bolt, washer, screw and nut should be AISI 316 / EN1.4404.

Sealant
WaStop with angle brackets and rubber seal comes with the rubber seal fitted on the WaStop. Damaged, out of round or otherwise irregular pipes might require additional sealing material.
WaStop with flange do generally <u>not</u> include any sealing material due to the variations of sealants different installations require.

Recommended sealant depends on the application, guidelines:

1) If the concrete wall is in good shape with no cracks, flush and otherwise not damaged it's usually enough with epdm tape, silicone sealant or similar attached to the flange to seal between the flange and the concrete mounting surface.

2) If the Concrete has minor irregularities: hydrophilic systems; swellable profiles or sealants such as sikaswell are recommended which can fill up minor cracks.

3) If the concrete has cracks or irregularities a non-shrinking grout is recommended to fill up the voids between the flange and the concrete wall.

4) If the rubber seal does not seal properly and there is a gap between inner pipe and rubber seal, sealant such as Sikaswell is recommended.

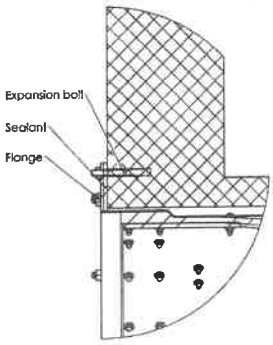

fig 4. Flange with applied sealant fastened with expansion bolt.

TOWN OF REDINGTON BEACH			WASTOP INSTALLATION GENERAL NOTES	601.2
REV.BY	DATE			
		DATE OF APPROVAL		

Angle brackets and rubber seal

The rubber seal should be positioned half way up the collar of the valve body, creating a step (diameter increase).

In case of cracks or out of round pipes, there might be need for additional sealant according to section *'Sealants'*.

Angle brackets should be close to the inner surface of the grooved pipe and attached with bolted connection through the pipe, preferable on the smaller outside diameter.

Flange

Larger WaStops are installed using flanges. Once the host pipe is cleaned out and inspected for irregularities, the following steps outlines an installation.

1) Position the WaStop. The first step in installing a WaStop is to position the valve. Flange bolt holes are sized to allow anchor bolts to pass through the flange to the mounting surface.
2) Place Anchors. If threaded rod is to be used for anchors, install stainless steel threaded rods cut to appropriate length using a two-part epoxy glue to secure the rods in the concrete. Allow time to set, according to the manufacturer's recommendation. Expansion anchors are installed according to the manufacturer's recommendation.
3) In the case of an irregular mounting surface, a thrust nut can be used to provide an adjustable surface against which the flange will rest (*see fig. 5*). Adjust the nut leaving about 10mm space between the flange and the mounting surface. In case of a flush surface apply sealant and push flange firmly against the mounting surface.
4) Place jam nut on each anchor, then firmly tighten jam nuts to permanentlysecure the gate.
5) In case of voids between the mounting surface and the flange; mix a non-shrinking grout and fill the space between the mounting surface and the flange that make a seal.

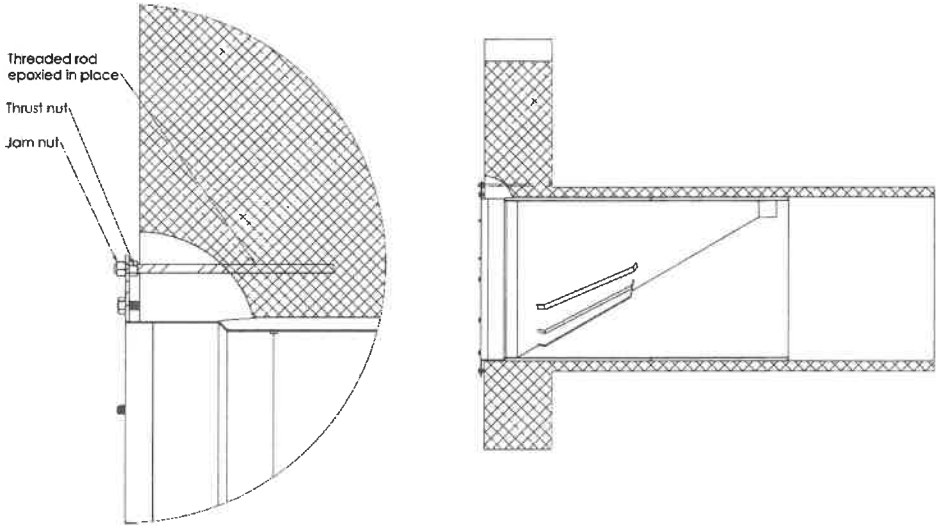

fig 5. WaStop with flange, mounting surface with crack.

TOWN OF REDINGTON BEACH			WASTOP INSTALLATION GENERAL NOTES	601.3
REV.BY	DATE			
		DATE OF APPROVAL		

Preparation for Installation

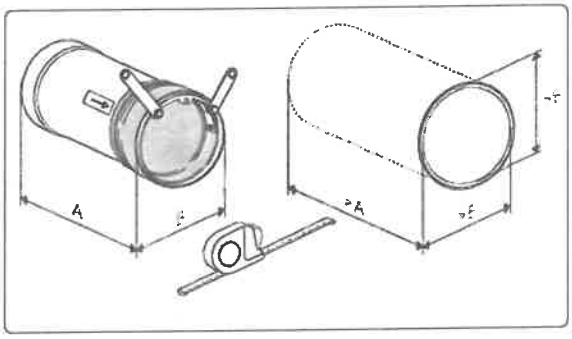

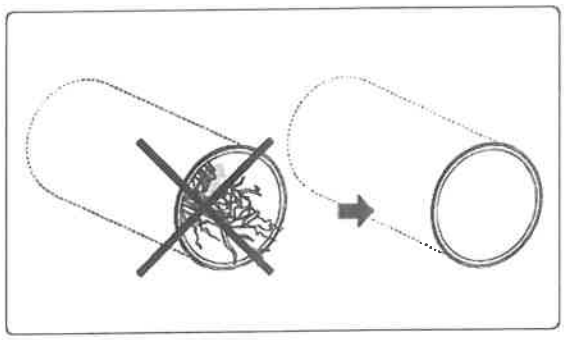

Note Opening Pressure

Document Serial Number

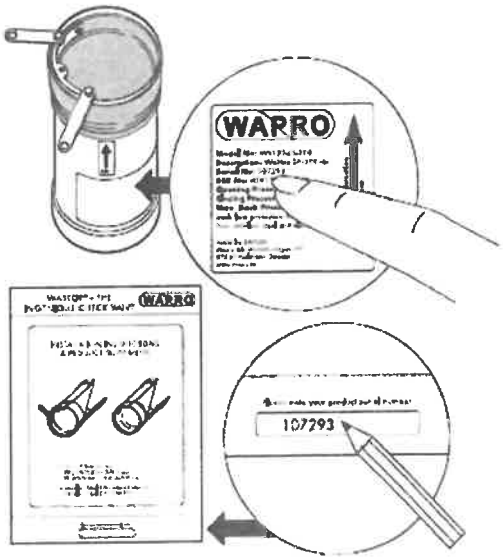

TOWN OF REDINGTON BEACH			WASTOP INSTALLATION PREPARATION	602
REV.BY	DATE			
		DATE OF APPROVAL		

Membrane Spine Must Be Installed Upwards

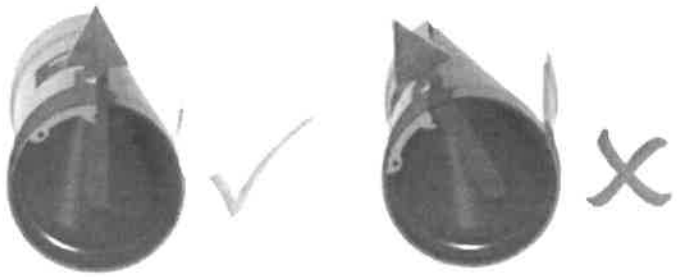

Components: 1) Flow Direction 2) Existing Pipe 3) Flexible Coupling 4) Rubber Seal 5) Head Wall/Chamber 6) Bolts 7) Flat Iron

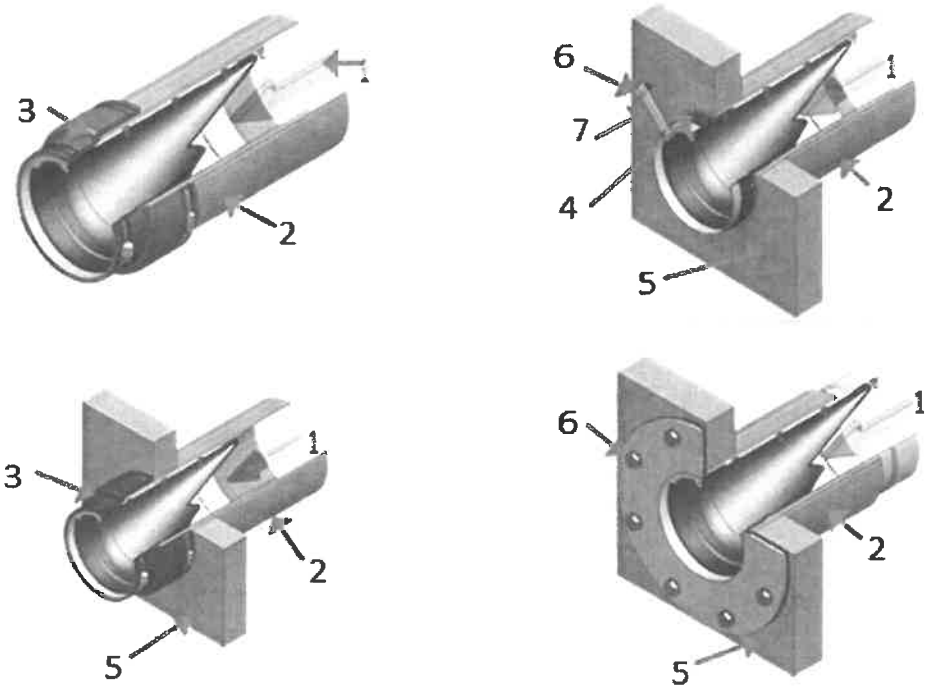

TOWN OF REDINGTON BEACH			WASTOP VALVE GENERAL INFORMATION	603
REV.BY	DATE			
		DATE OF APPROVAL		

OUTLET INSTALLATION STAINLESS STEEL (INLET INTO CHAMBER)

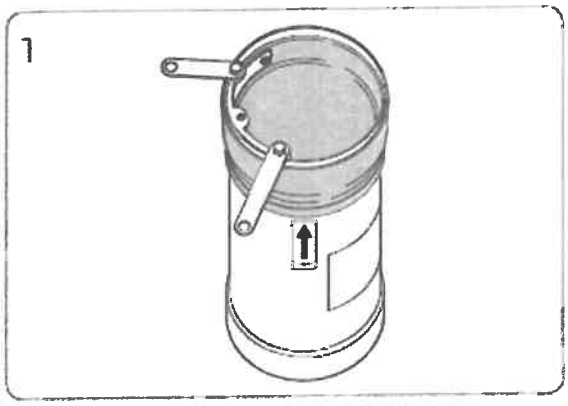

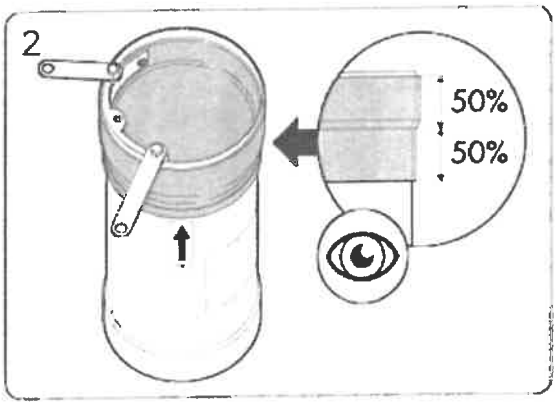

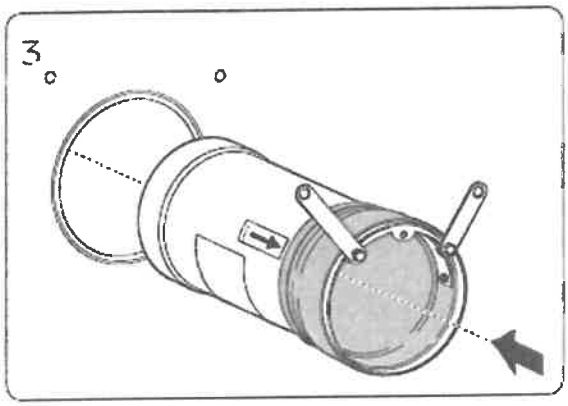

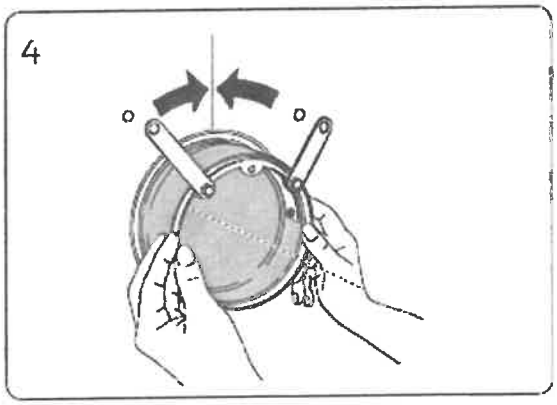

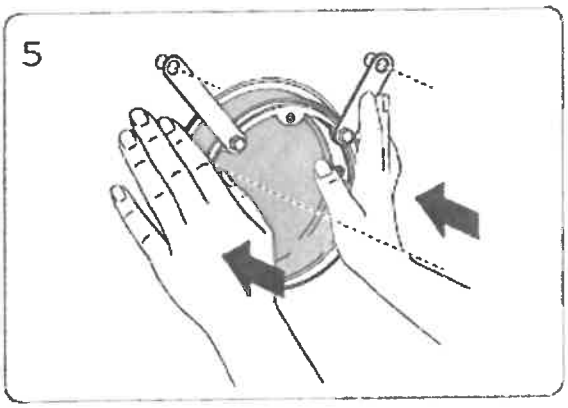

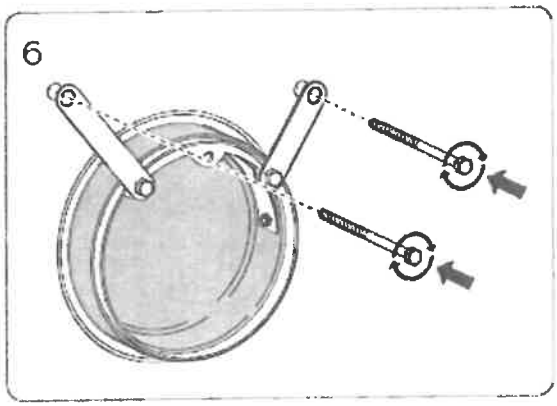

TOWN OF REDINGTON BEACH			WASTOP INSTALL INLET INTO CHAMBER	604
REV.BY	DATE			
		DATE OF APPROVAL		

INLET INSTALLATION STAINLESS STEEL (OUTLET FROM CHAMBER)

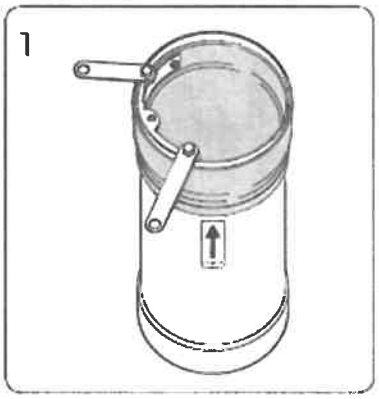

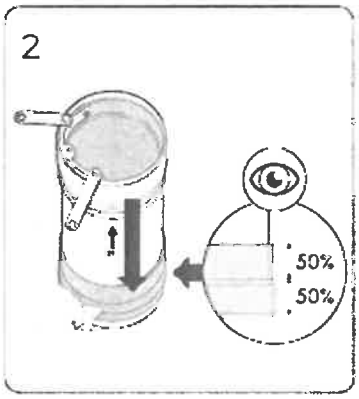

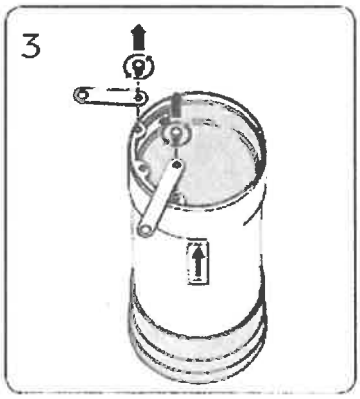

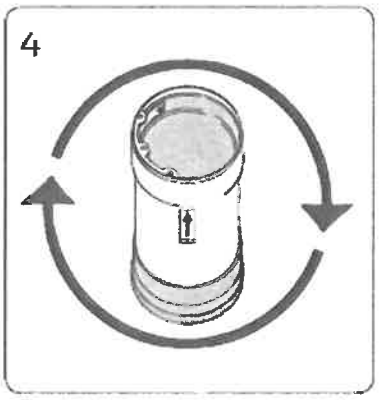

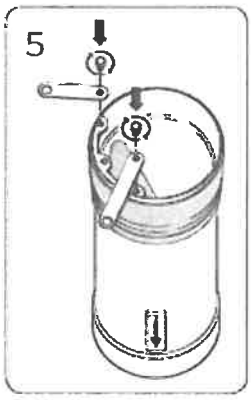

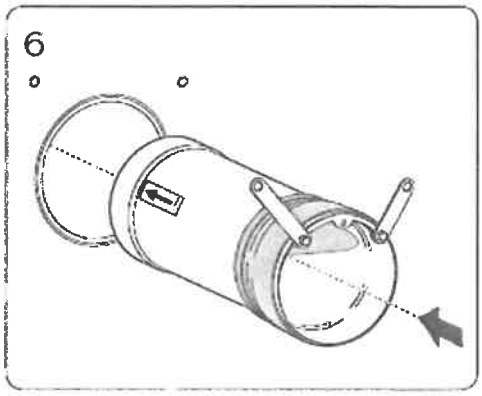

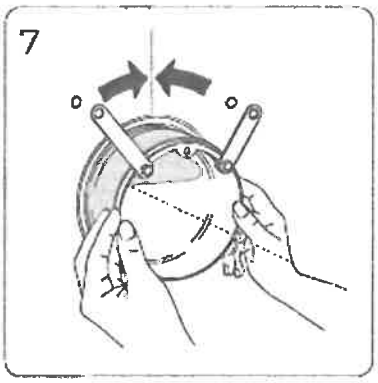

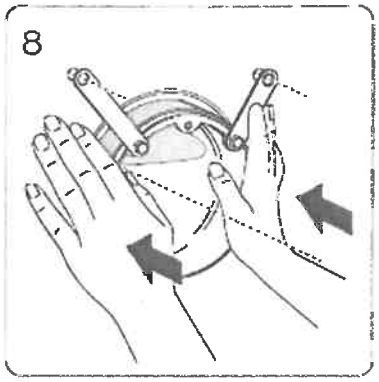

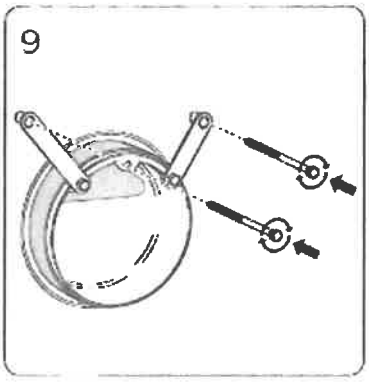

TOWN OF REDINGTON BEACH			WASTOP INSTALL OUTLET FROM CHAMBER	605
REV.BY	DATE			
		DATE OF APPROVAL		

FLEXIBLE COUPLING INSTALLATION

1

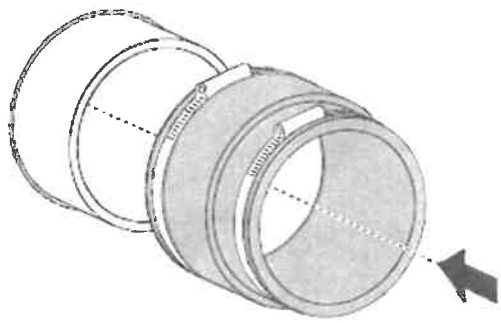

2

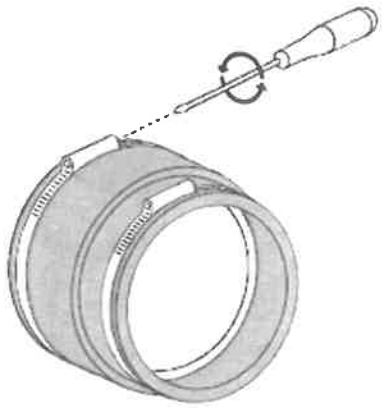

3

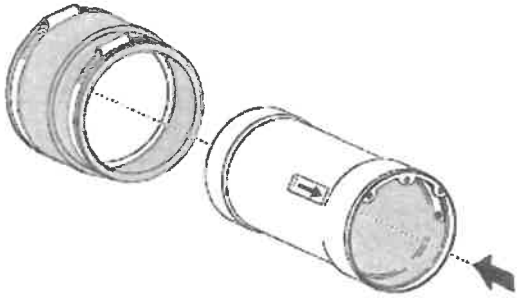

4

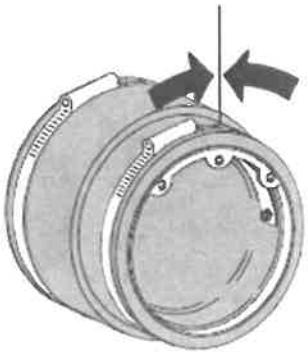

5

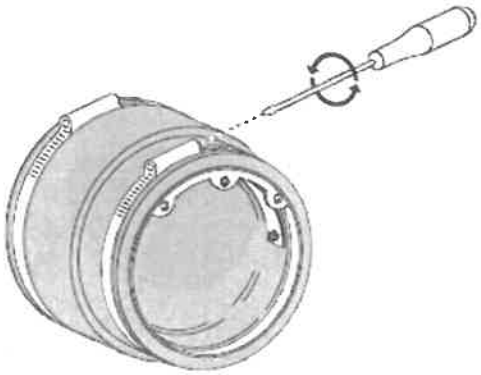

TOWN OF REDINGTON BEACH			WASTOP FLEXIBLE COUPLING INSTALL	606
REV.BY	DATE			
		DATE OF APPROVAL		

FLANGE INSTALLATION STAINLESS STEEL

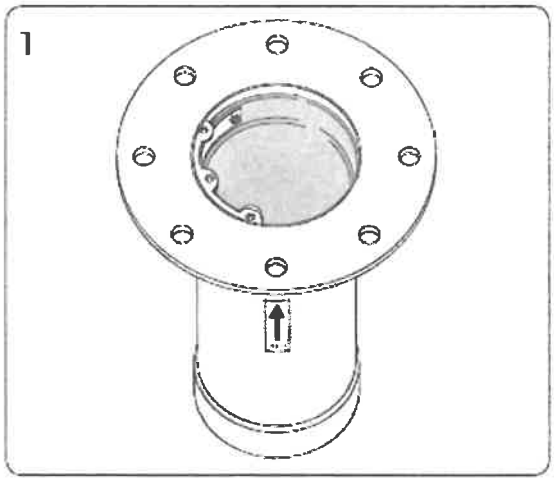

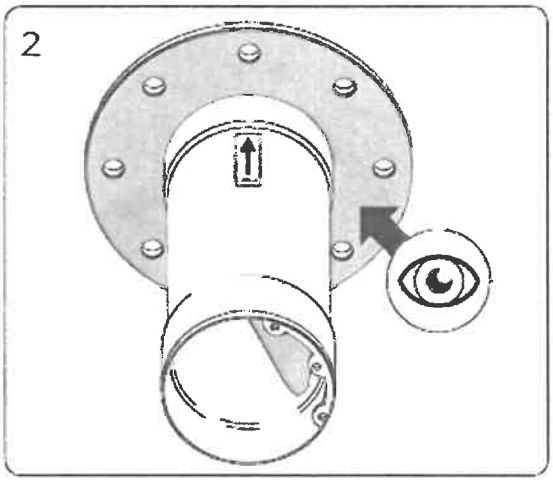

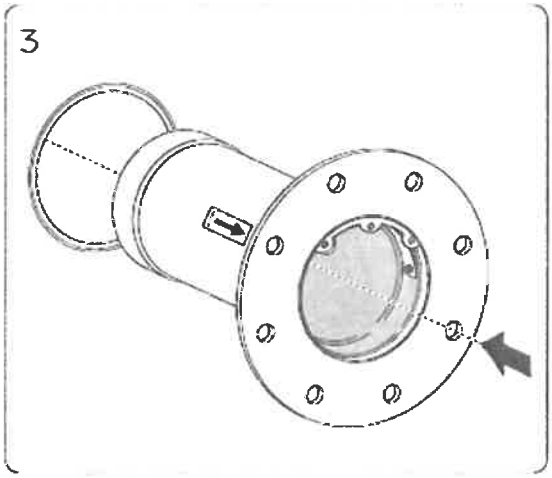

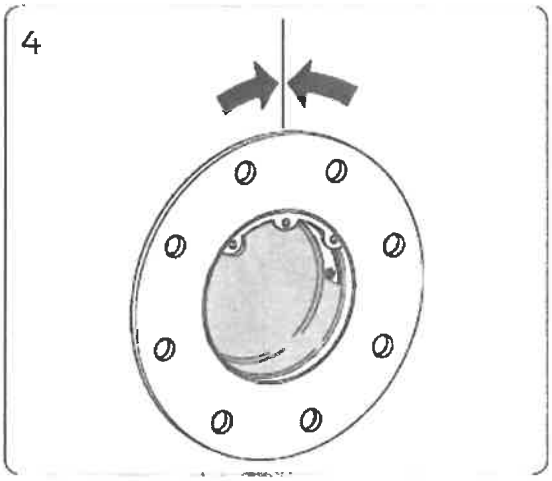

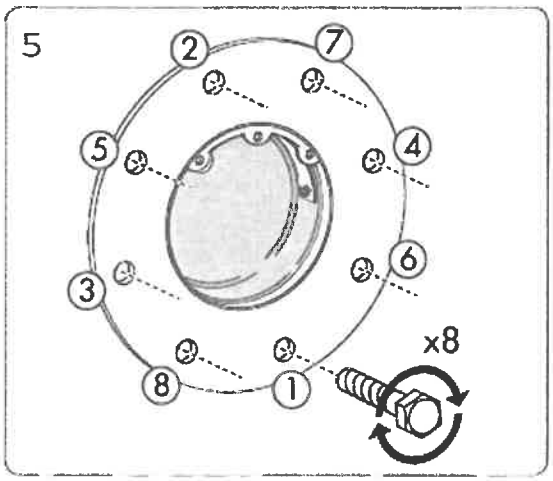

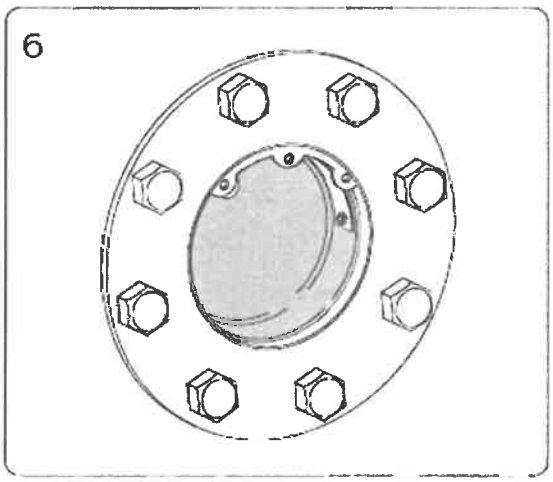

TOWN OF REDINGTON BEACH			WASTOP FLANGE INSTALLATION	607
REV.BY	DATE			
		DATE OF APPROVAL		

PVC INLINE INSTALLATION

1

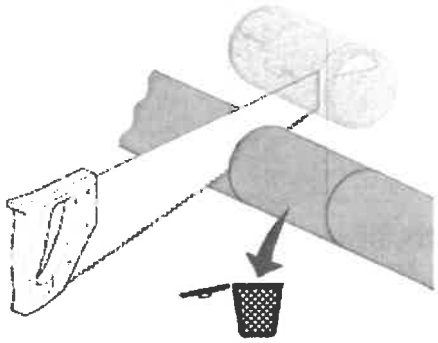

2

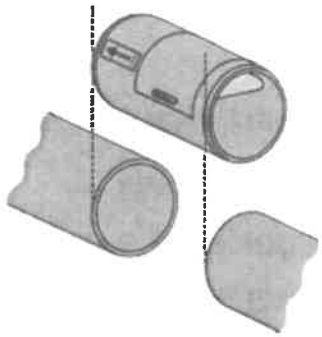

3

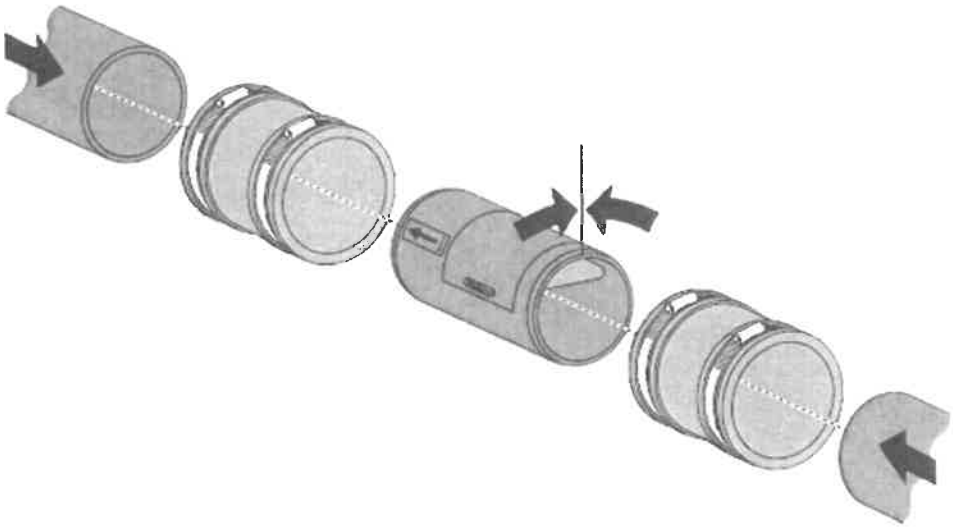

4

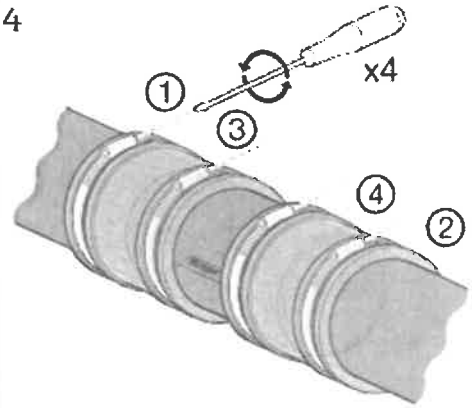

TOWN OF REDINGTON BEACH			WASTOP PVC INLINE INSTALLATION	608
REV.BY	DATE			
		DATE OF APPROVAL		

LOT DRAINAGE INDEX

	SHEET NO.
700 LOT DRAINAGE SPECIFICATIONS	700.0
1) GENERAL NOTES	700.1
2) LOT DRAINAGE PATTERN EXAMPLE FOR SITE	700.2
3) SILT FENCE DETAIL	700.3
4) RESERVED	700.4
5) LOT GRADING RECORD DRAWING/AS-BUILT CERTIFICATION	700.5
6) TYPICAL INFILTRATION TRENCH (NTS)	700.6
7) HEAVY DUTY INFILTRATION TRENCH (NTS)	700.7
8) TYPICAL SWALE DETAIL	700.8

GENERAL NOTES:

1.) FOR CLOSED DRAINAGE, SHOW CURBS, GUTTERS AND SIDEWALKS, IF APPLICABLE.

2.) EXISTING DRAINAGE SHALL BE MAINTAINED OR IMPROVED.

3.) MINIMUM DRIVEWAY RISE FROM CURB TO GARAGE IS 1%.

4.) SHOW ALL EASEMENTS.

5.) MINIMUM GRADE SLOPES ARE AS FOLLOWS: FRONT YARD - 2.0%; REAR AND SIDE YARDS - 1.5%; SWALES - 1.0%.

6.) MINOR MODIFICATIONS TO ACCOMMODATE SPECIAL CONDITIONS SUCH AS TREES MAY BE APPROVED BY THE ACCESS/DRAINAGE INSPECTOR.

7.) LOTS WITH SPECIAL CONDITIONS MAY HAVE SLOPES BASED ON AN ENGINEER'S DETAILED DESIGN APPROVED BY THE TRANSPORTATION DIRECTOR OR A DESIGNEE.

8.) DEVIATIONS DUE TO EXISTING TREES, VEGETATION OR OTHER EXTENUATING CIRCUMSTANCES MAY BE APPROVED. DIFFICULTIES ARISING FROM SUCH DEVIATIONS ARE THE RESPONSIBILITY OF THE PROPERTY OWNER TO SATISFACTORILY RESOLVE.

9.) LOT SLOPES APPLY TO A 75' RADIUS FROM THE EDGE OF HOUSE. THE INTENT IS TO ALLOW FLEXABILITY ON LARGER LOTS.

10.) ALL CONFLICTS SHALL BE REMEDIED TO THE SATISFACTION OF THE PUBLIC WORKS DEPARTMENT.

11.) PERMITTEE SHALL SUBMIT A COPY OF THE APPROVED SUBDIVISION DRAINAGE PLAN. SIZE REQUIREMENTS ARE 8-1/2"x11", 8-1/2"x14" OR 11"x17" AT A SCALE OF 1"=100' OR 1"=200' FOR LOTS OF 5 ACRES OR MORE.

TOWN OF REDINGTON BEACH			LOT DRAINAGE GENERAL NOTES	700.1
REV.BY	DATE			
		DATE OF APPROVAL		

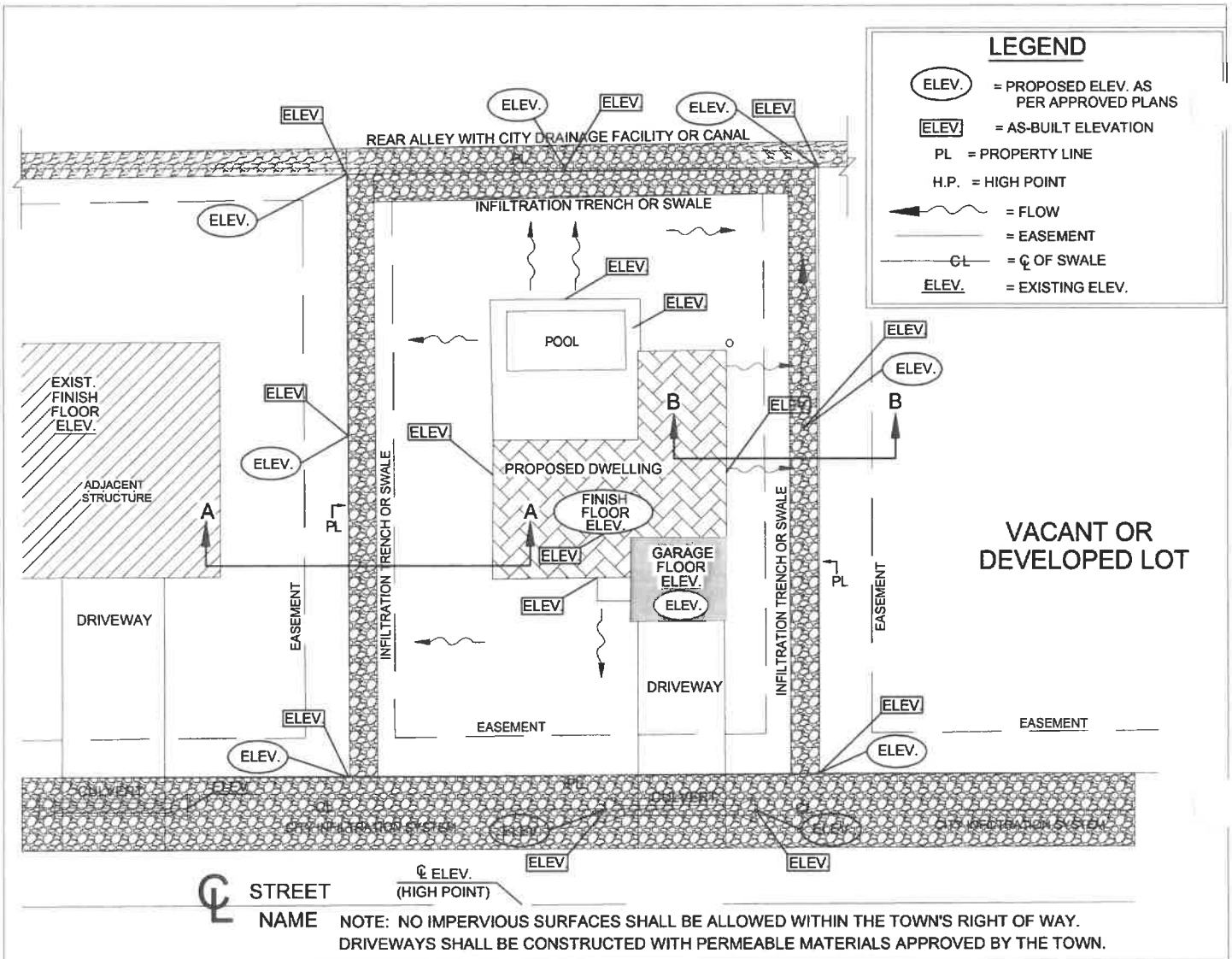

NOTE: THE INTENT IS TO CONVEY RUNOFF TO THE PUBLIC R/W BY USING ONE, OR ANY COMBINATION OF, BUT NOT LIMITED TO: SWALES, GUTTERS, YARD DRAINS, INFILTRATION TRENCHES OR SLOTTED PIPE.

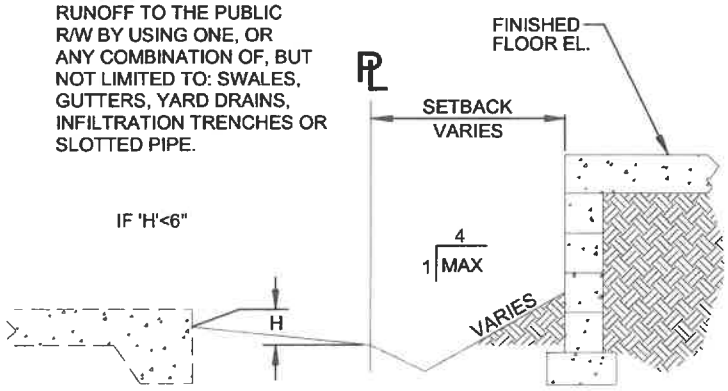

SWALE OPTION

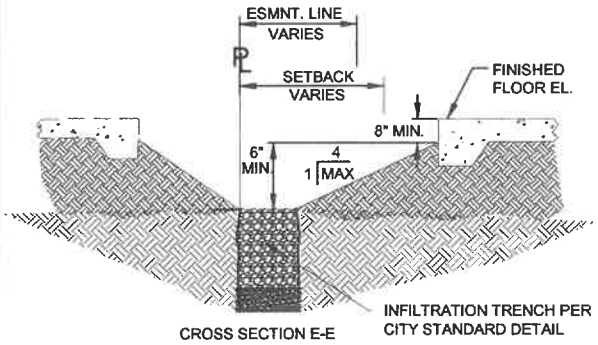

INFILTRATION TRENCH OPTION

TOWN OF REDINGTON BEACH			LOT DRAINAGE PATTERN EXAMPLE FOR SITE	700.2
REV.BY	DATE			
		DATE OF APPROVAL		

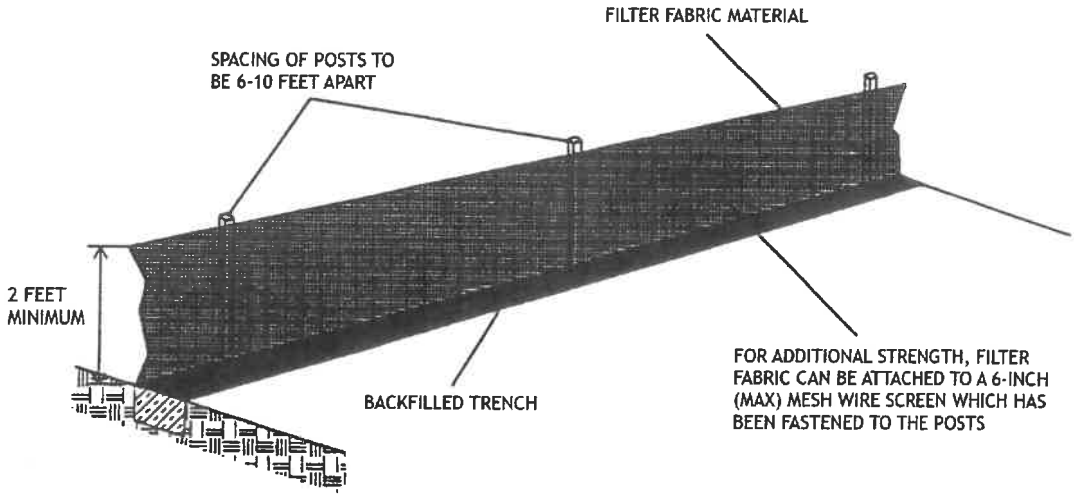

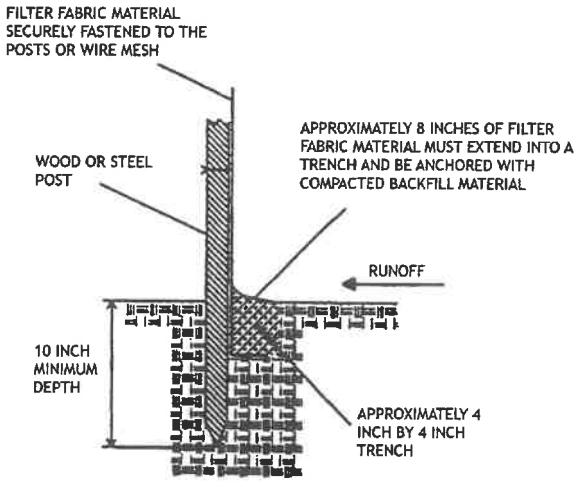

ATTACHING TWO SILT FENCES

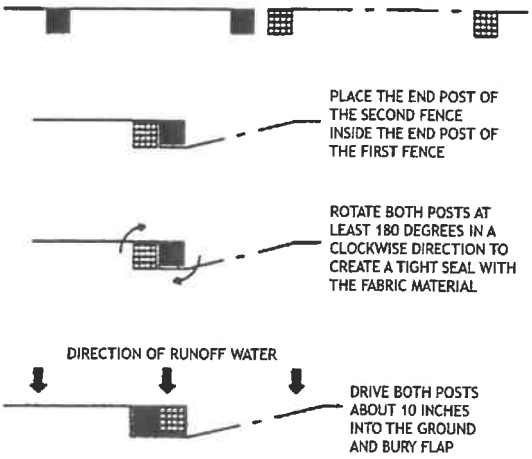

TOWN OF REDINGTON BEACH			SILT FENCE INSTALLATION	700.3
REV.BY	DATE			
		DATE OF APPROVAL		

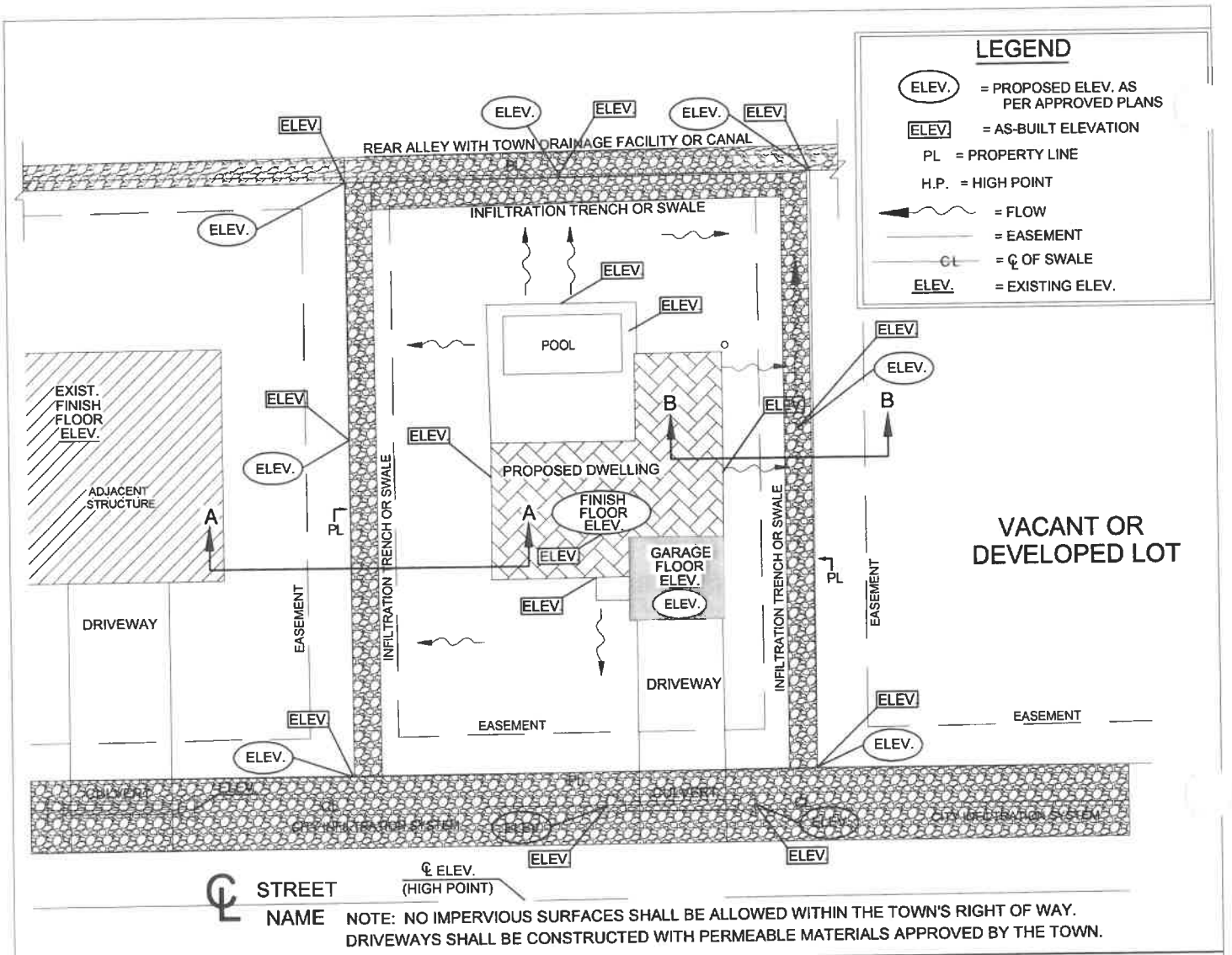

NOTE: THE INTENT IS TO CONVEY RUNOFF TO THE PUBLIC R/W BY USING ONE, OR ANY COMBINATION OF, BUT NOT LIMITED TO: SWALES, GUTTERS, YARD DRAINS, INFILTRATION TRENCHES OR SLOTTED PIPE.

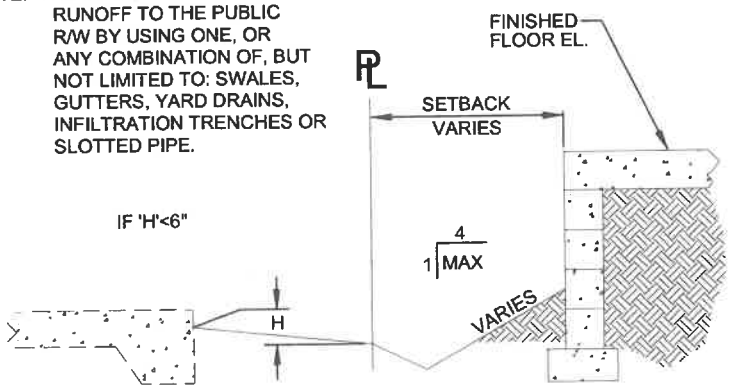

SWALE OPTION

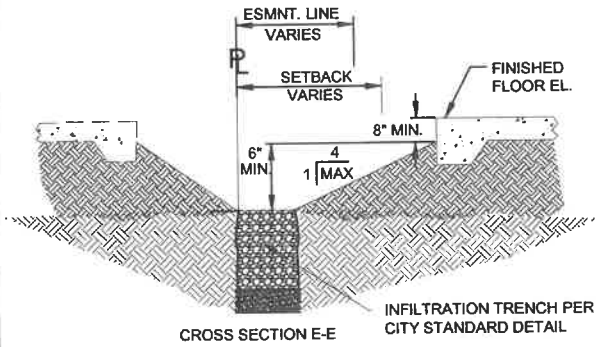

CROSS SECTION E-E

INFILTRATION TRENCH OPTION

TOWN OF REDINGTON BEACH	LOT GRADING RECORD DRAWING/AS-BUILT CERTIFICATION	700.5
REV.BY / DATE		
DATE OF APPROVAL		

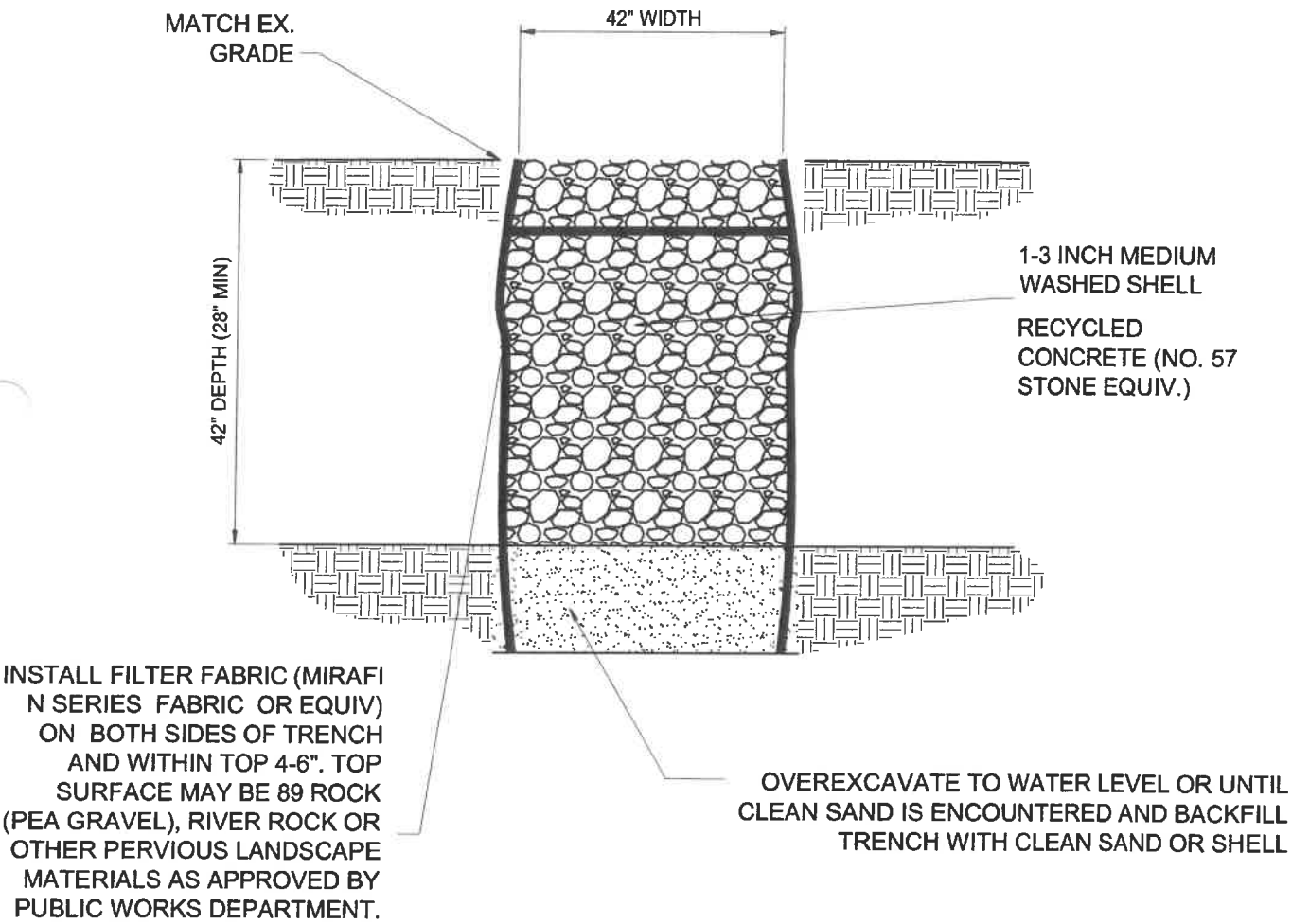

TYPICAL INFILTRATION TRENCH

NTS

TOWN OF REDINGTON BEACH			TYPICAL INFILTRATION TRENCH	700.6
REV.BY	DATE			
		DATE OF APPROVAL		

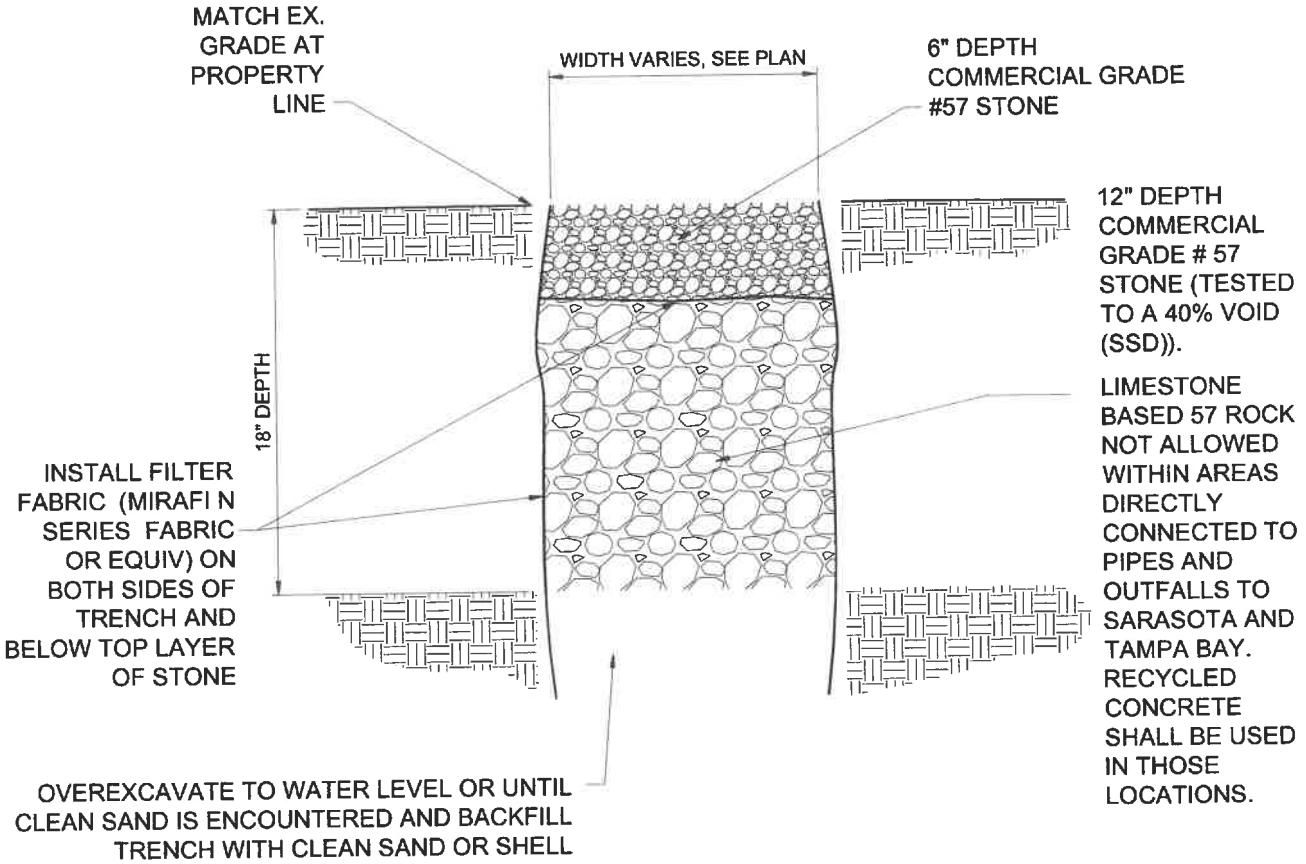

HEAVY DUTY INFILTRATION TRENCH

NTS

TOWN OF REDINGTON BEACH			HEAVY DUTY INFILTRATION TRENCH	700.7
REV.BY	DATE			
		DATE OF APPROVAL		

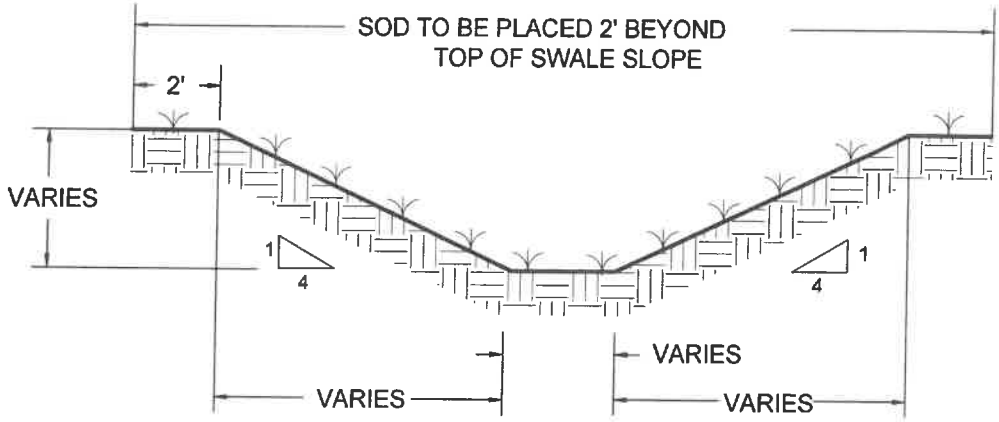

TYPICAL SWALE SECTION

N.T.S.

TOWN OF REDINGTON BEACH			TYPICAL SWALE DETAIL	700.8
REV.BY	DATE			
		DATE OF APPROVAL		

EXHIBIT A-1

STANDARD DETAILS FROM

Pinellas County

PINELLAS COUNTY

STORMWATER MANUAL

FEBRUARY 1, 2017

6.2.2. Required Level of Treatment and Associated Treatment Volume

The Required Treatment Volume (RTV) necessary to achieve the required treatment efficiency shall be routed to the exfiltration trench and percolated into the ground. The required nutrient load reduction is set forth in the performance standards in **Section 5.1.1**. of this Manual.

Treatment volumes to achieve the necessary efficiencies shall be determined based on the percentage of directly connected impervious area (DCIA) and the weighted curve number for non-DCIA areas as set forth in Table 6.1.1 and Table 6.1.2.

Exfiltration trenches must be designed to have the capacity to retain the required treatment volume without discharging to surface waters.

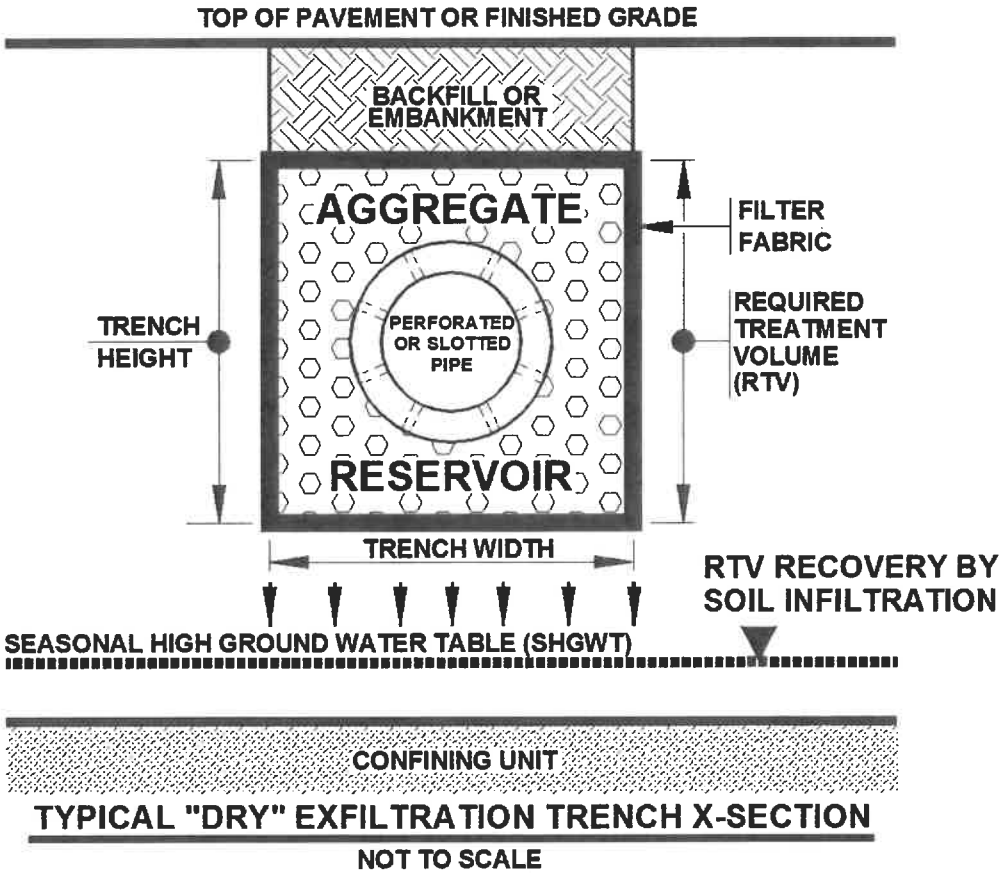

Figure 6.2.1 Cross-section of a "DRY" Exfiltration Trench (N.T.S.)

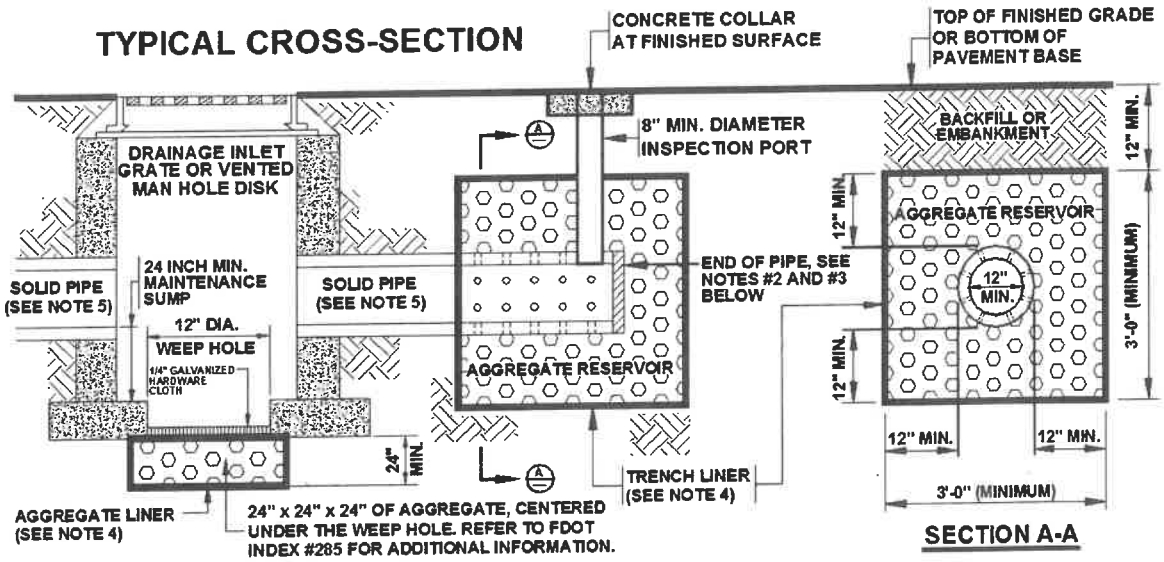

NOTES:

1. SEE THE SEPARATE DETAIL SKETCHES FOR SEDIMENT / TRASH BAFFLES & TEES, OR OTHER EQUIVALENT DEVICES.
2. PERFORATED OR SLOTTED PIPES SHALL TERMINATE A MINIMUM OF TWO (2) FEET FROM THE END OF THE EXFILTRATION TRENCH, OR CONNECT TO ADDITIONAL INLETS OR MANHOLES.
3. PIPE "DEAD ENDS" (IF UTILIZED) SHALL TERMINATE INTO A SOLID PLUG OR END CAP.
4. SIDES, TOP, BOTTOM, AND ENDS OF TRENCH (AND AGGREGATE BELOW DRAIN HOLE) SHALL BE LINED WITH A PERVIOUS WOVEN OR NON-WOVEN ENGINEERING FILTER FABRIC. OVERLAP FABRIC LINING MATERIAL A MINIMUM OF TWELVE (12) INCHES AT THE TOP OF THE AGGREGATE.
5. REFER TO FDOT INDEX #285 FOR ADDITIONAL INFORMATION ON THE MINIMUM LENGTHS OF SOLID PIPE EXITING THE ACCESS MANHOLE OR DRAINAGE INLET, AND THE MINIMUM CROSS SECTIONAL DIMENSIONS OF THE AGGREGATE RESERVOIR.

"GENERIC" EXFILTRATION TRENCH SUMPS & DEAD END DETAILS

NOT TO SCALE

Figure 6.2.3. Typical Exfiltration Trench Sumps and Dead End Details

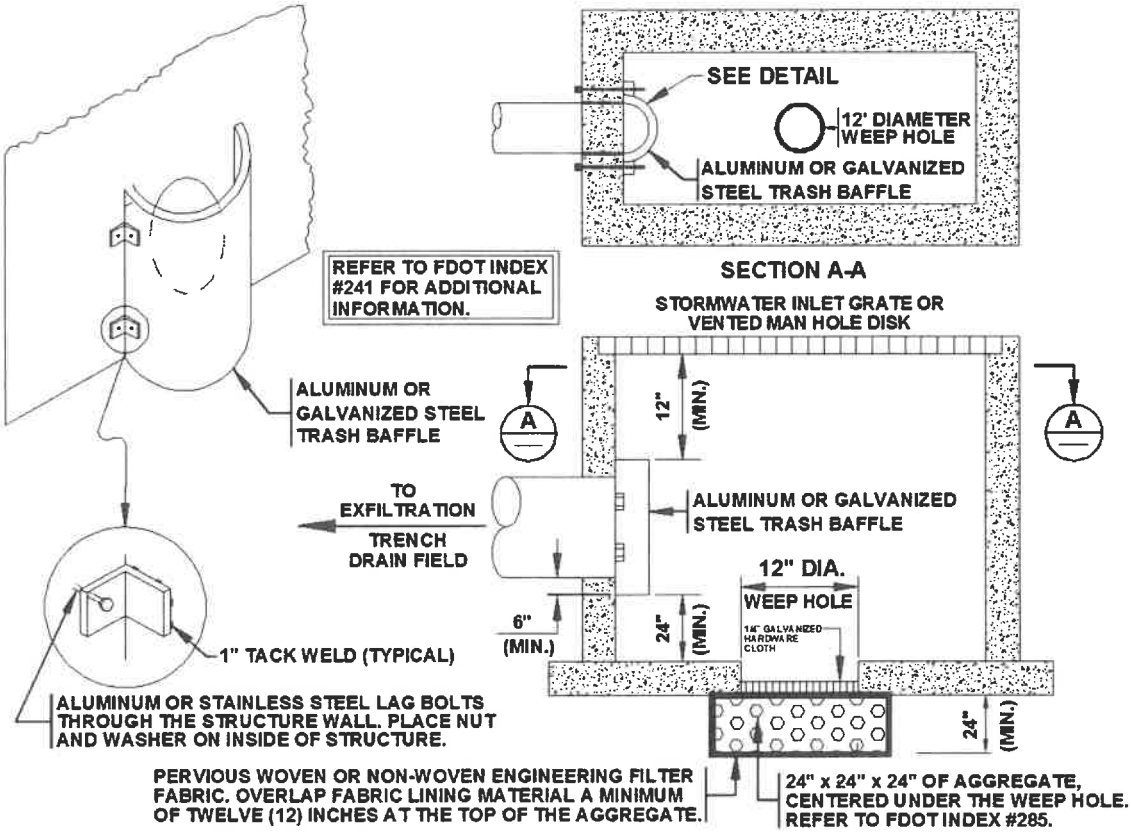

Figure 6.2.4. Detail for Exfiltration Trench Trash Baffle

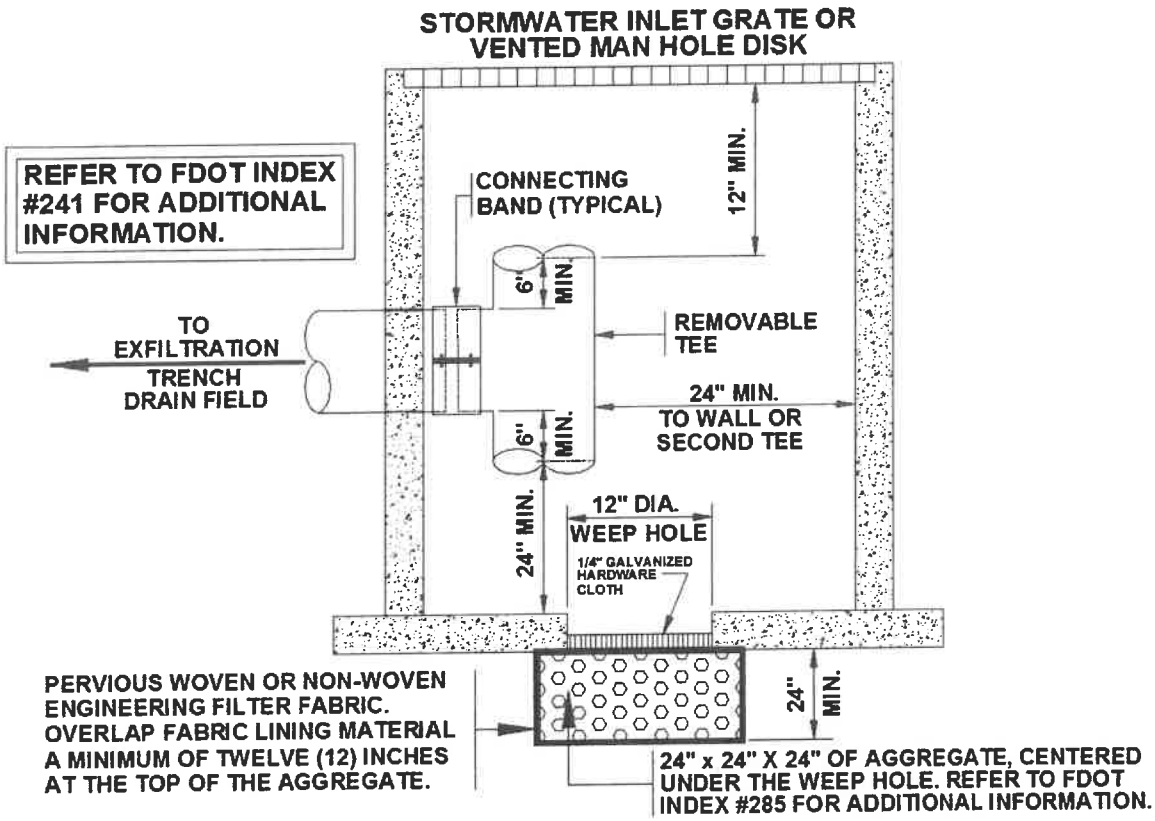

Figure 6.2.5. Generic Detail for a Typical Exfiltration Trench Trash Tee

6.2.6. Construction requirements

During construction, every effort should be made to limit the parent soil and debris from entering the trench. Any method used to reduce the amount of fines entering the exfiltration trench during construction will extend the life of the system.

(a) The location and dimensions of the exfiltration trench shall be verified onsite prior to trench construction. All design requirements including trench dimensions and distances to foundations, septic systems, wells, etc., need to be verified.

(b) To minimize sealing of the soil surface, the trench shall be excavated with a backhoe rather than front-end loaders or bulldozers whose blades will seal the infiltration soil surface.

(c) Excavated materials shall be placed a sufficient distance from the sides of the excavated area to minimize the risk of sidewall cave-ins and prevent the material from re-entering the trench.

(d) The trench bottom and side walls shall be inspected for materials that could puncture or tear the filter fabric, such as tree roots, and assure they are not present.

6.3. Underground Storage and Retention Systems design criteria

6.3.1. Description

Underground storage and retention systems are special types of retention systems that capture the Required Treatment Volume (RTV) in an underground storage system and "drainfield." Generally, these systems consist of lightweight, high strength modular units with "open" bottoms to allow for soil infiltration (refer to Figure 6.3.1 below). These systems are sometimes used where land values are high, and the owner/applicant desires to minimize the potential loss of usable land with other types of retention Best Management Practices (BMPs). Underground retention systems are not intended to have human access for maintenance.

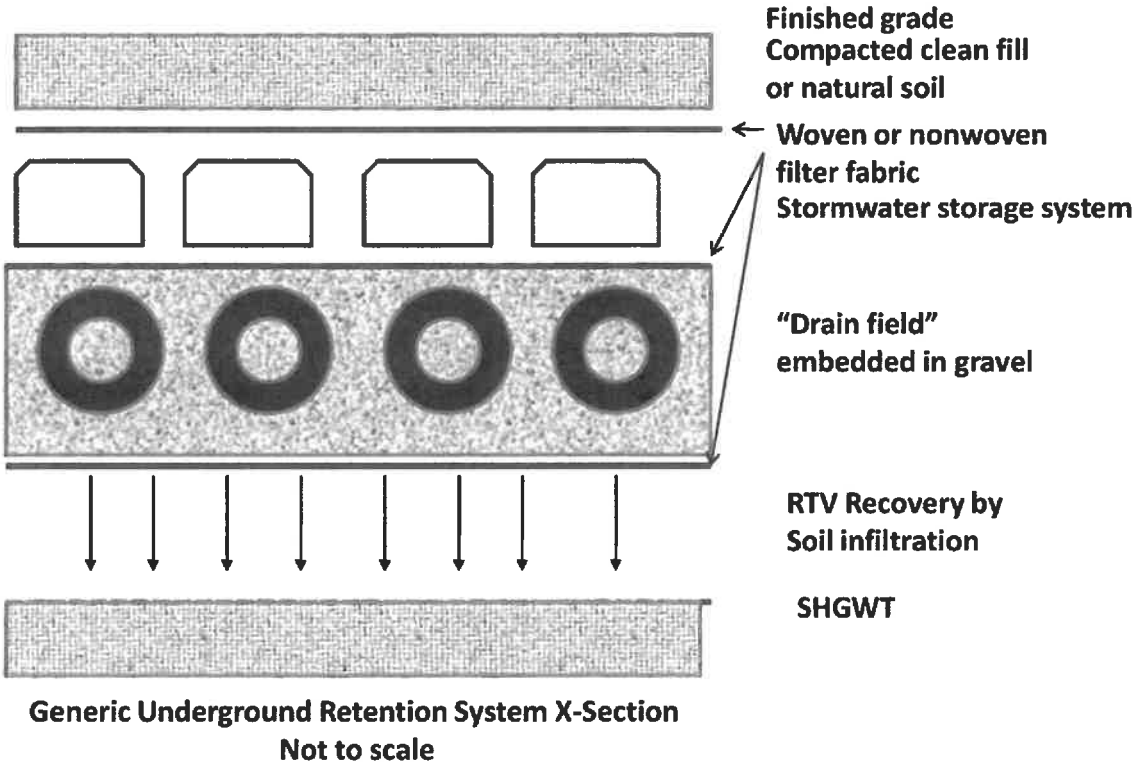

Figure 6.3.1. Generic Underground Retention System

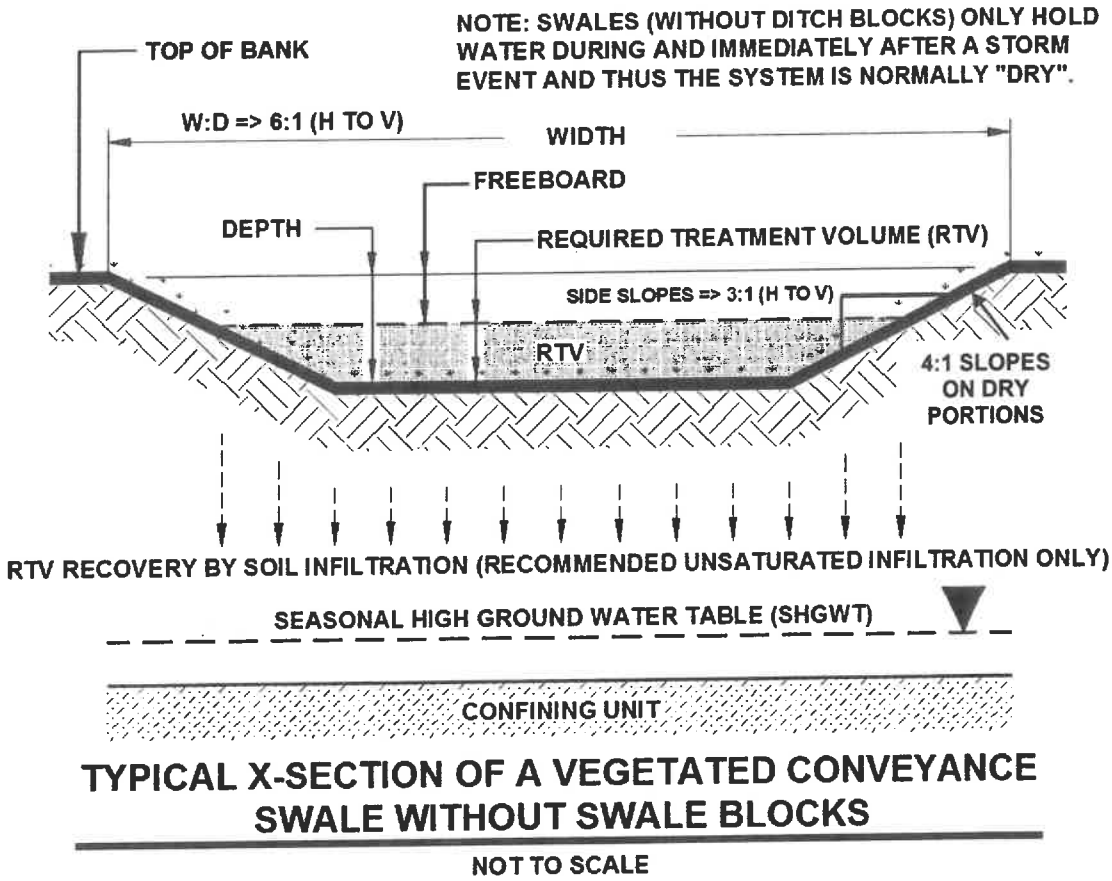

TYPICAL X-SECTION OF A VEGETATED CONVEYANCE SWALE WITHOUT SWALE BLOCKS

NOT TO SCALE

Figure 6.4.1. Typical Cross-section of a Conveyance Swale without Swale Blocks

6.4.5. Calculating the Swale Length for Swales without Blocks

The average flow rate through the swale and the length of swale needed to percolate a given volume of stormwater can be calculated using the two equations below.

Equation 6.4.1 Calculating the average flow rate:

This is calculated using the rational formula with the peak rate divided by 2 (average of triangular hydrograph).

$Q = 0.5\ CIA$

Where:

Q = Average flow rate

C = runoff coefficient

I = rainfall intensity (inches/hour) for the time of concentration

A = area of the swale being used for infiltration

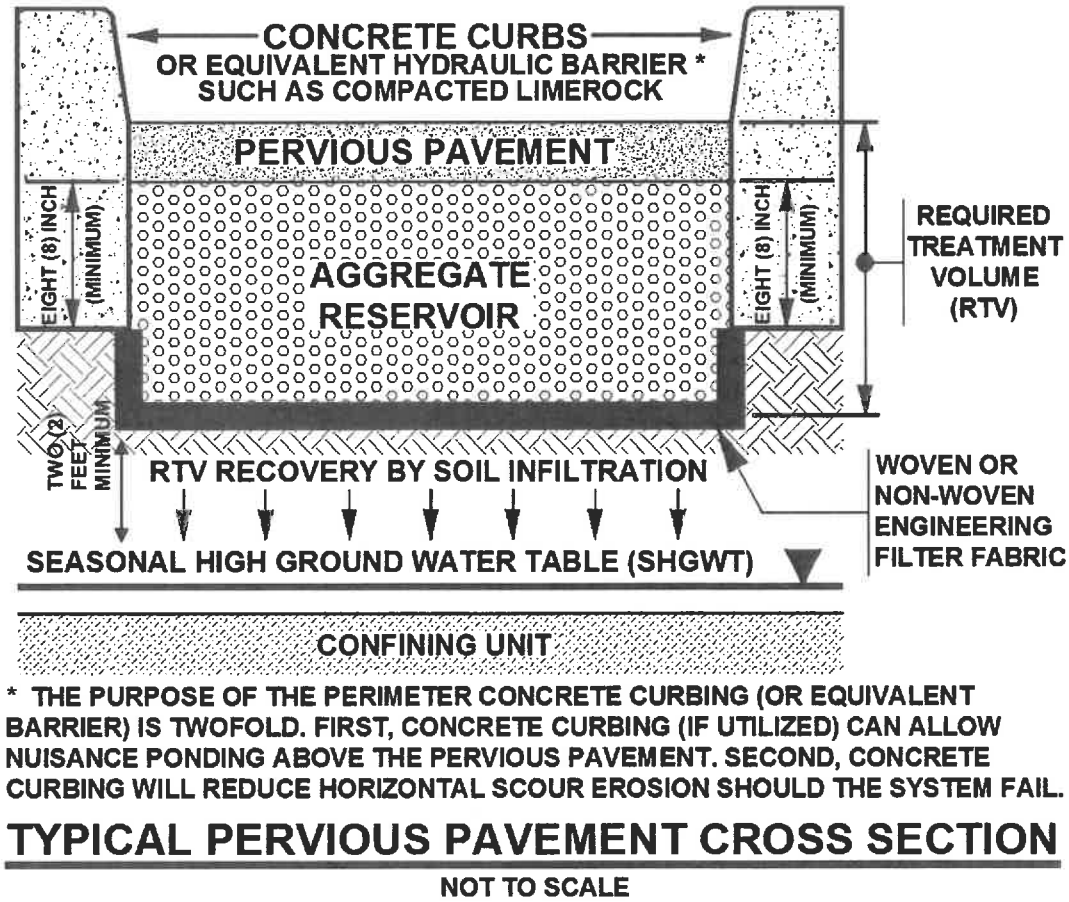

*** THE PURPOSE OF THE PERIMETER CONCRETE CURBING (OR EQUIVALENT BARRIER) IS TWOFOLD. FIRST, CONCRETE CURBING (IF UTILIZED) CAN ALLOW NUISANCE PONDING ABOVE THE PERVIOUS PAVEMENT. SECOND, CONCRETE CURBING WILL REDUCE HORIZONTAL SCOUR EROSION SHOULD THE SYSTEM FAIL.**

TYPICAL PERVIOUS PAVEMENT CROSS SECTION

NOT TO SCALE

FIGURE 6.6.1. Typical Pervious Pavement Cross Section

6.6.3. Required Treatment Volume

The treatment volume necessary to achieve the required treatment efficiency shall be routed to the pervious pavement system and percolated into the ground. The required nutrient load reduction is set forth in the performance standards in ***Section 5.1.1*** of this Manual.

Treatment volumes to achieve the necessary efficiencies shall be determined based on the percentage of directly connected impervious area (DCIA) and the weighted curve number for non-DCIA areas as set forth in Table 6.1.1 and Table 6.1.2.

6.6.4. Calculating Load Reduction Efficiency for a Given Retention Volume

Use **Table 6.1.1** to determine the treatment volume needed to achieve an 80% pollutant load reduction

If pervious pavements are being used in a BMP treatment train to achieve part of the required pollutant load reduction use **Table 6.1.2** to determine the percent reduction associated with various treatment volumes. Also use Table 6.1.2 to determine the treatment volume associated with the required nutrient load reduction to achieve the performance standard of reducing nutrient loads by at least 10% from current discharges.

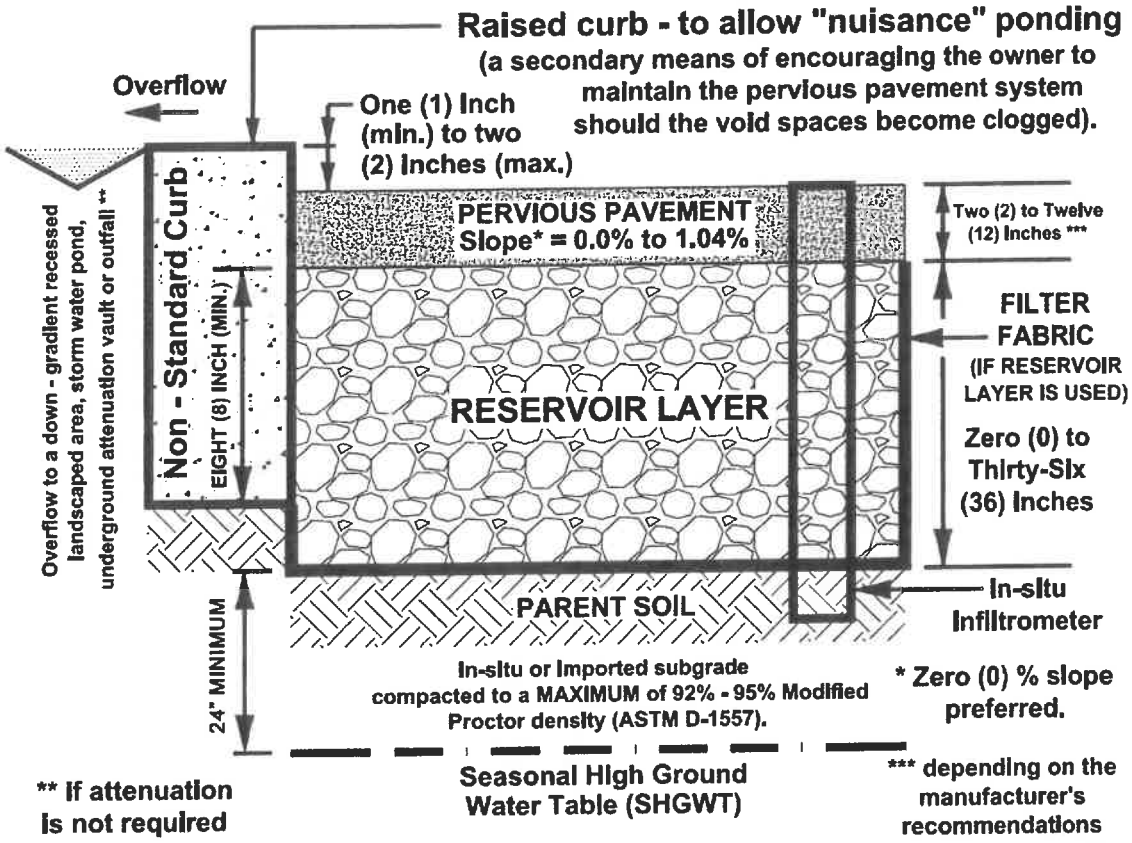

Potential Pervious Pavement Cross Section #1
Scale: None

FIGURE 6.6.2. Pervious Pavement System Cross Section #1.

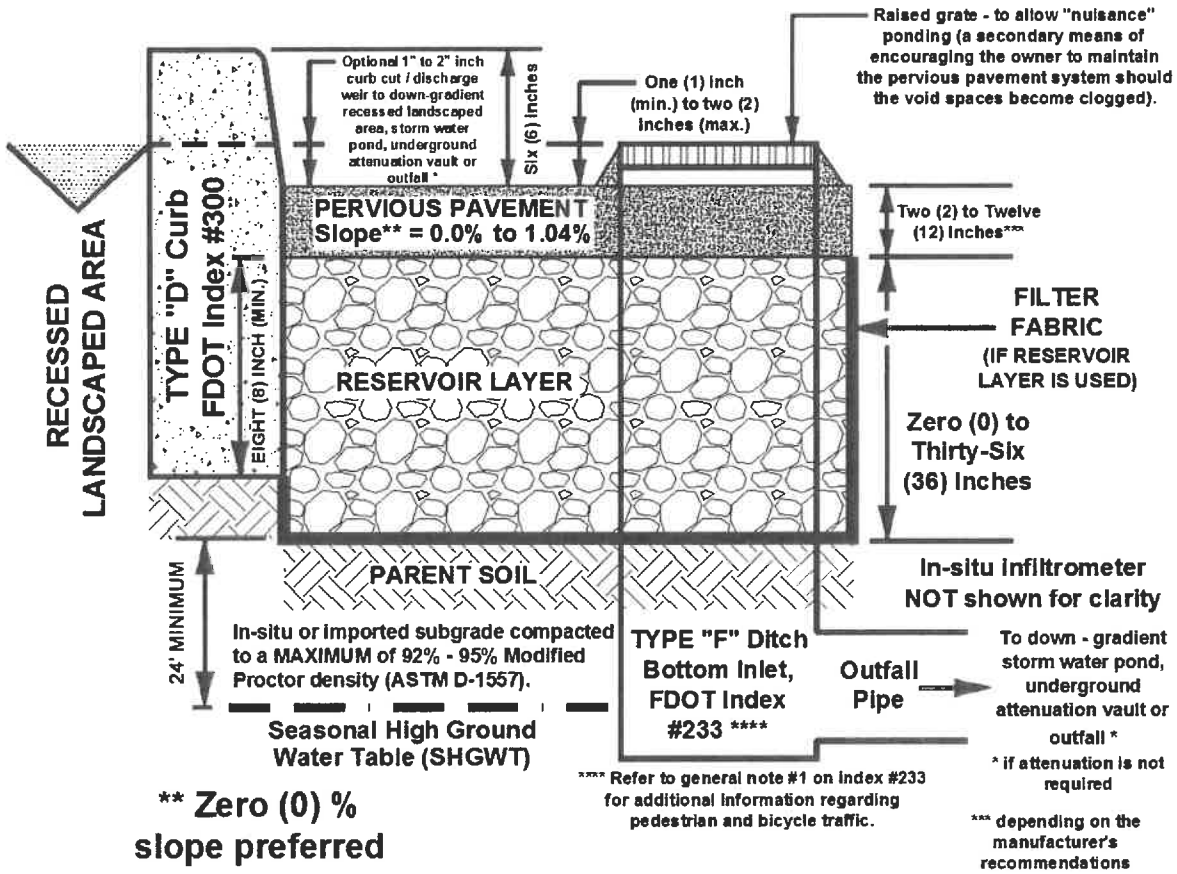

Potential Pervious Pavement Cross Section #2

Scale: None

FIGURE 6.6.3. Pervious Pavement System Cross Section #2.

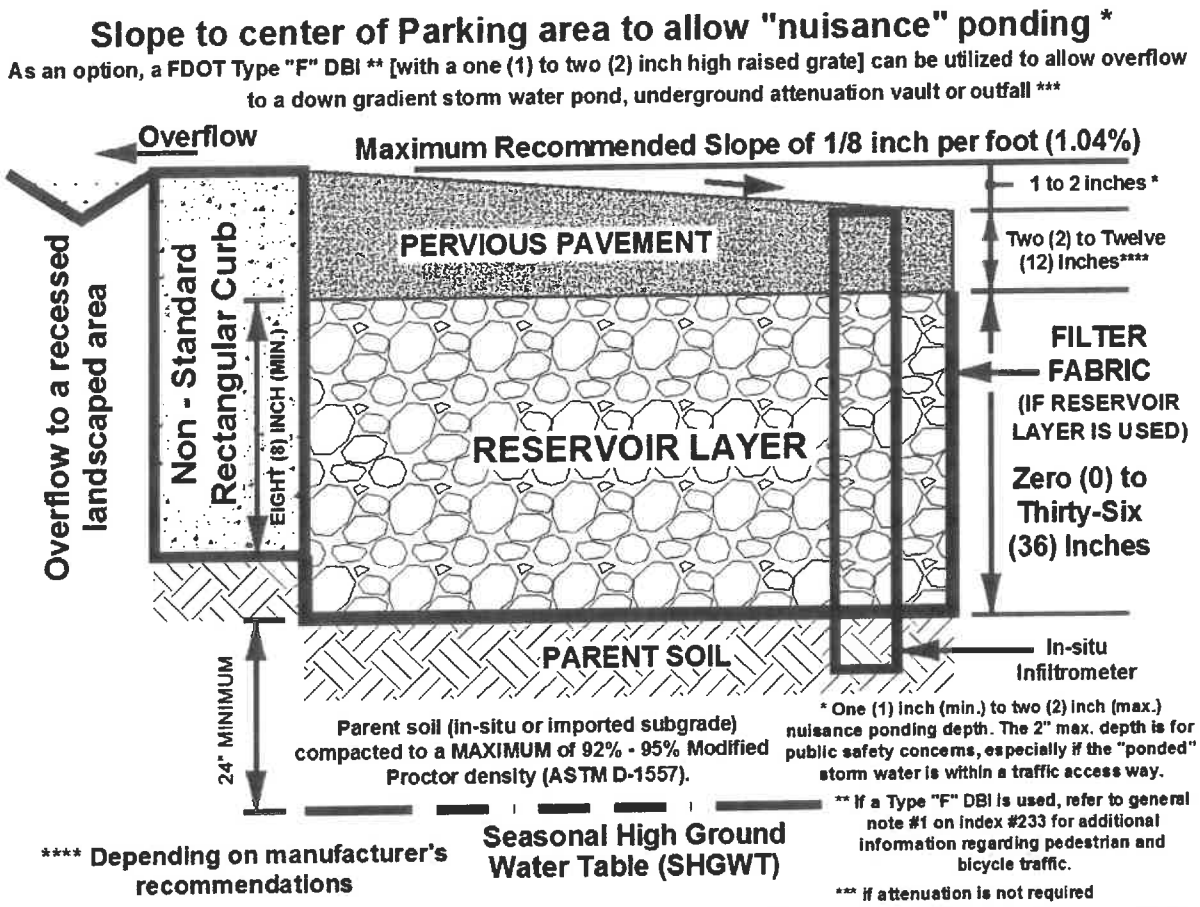

FIGURE 6.6.4. Typical Pervious Pavement System Cross Section #3.

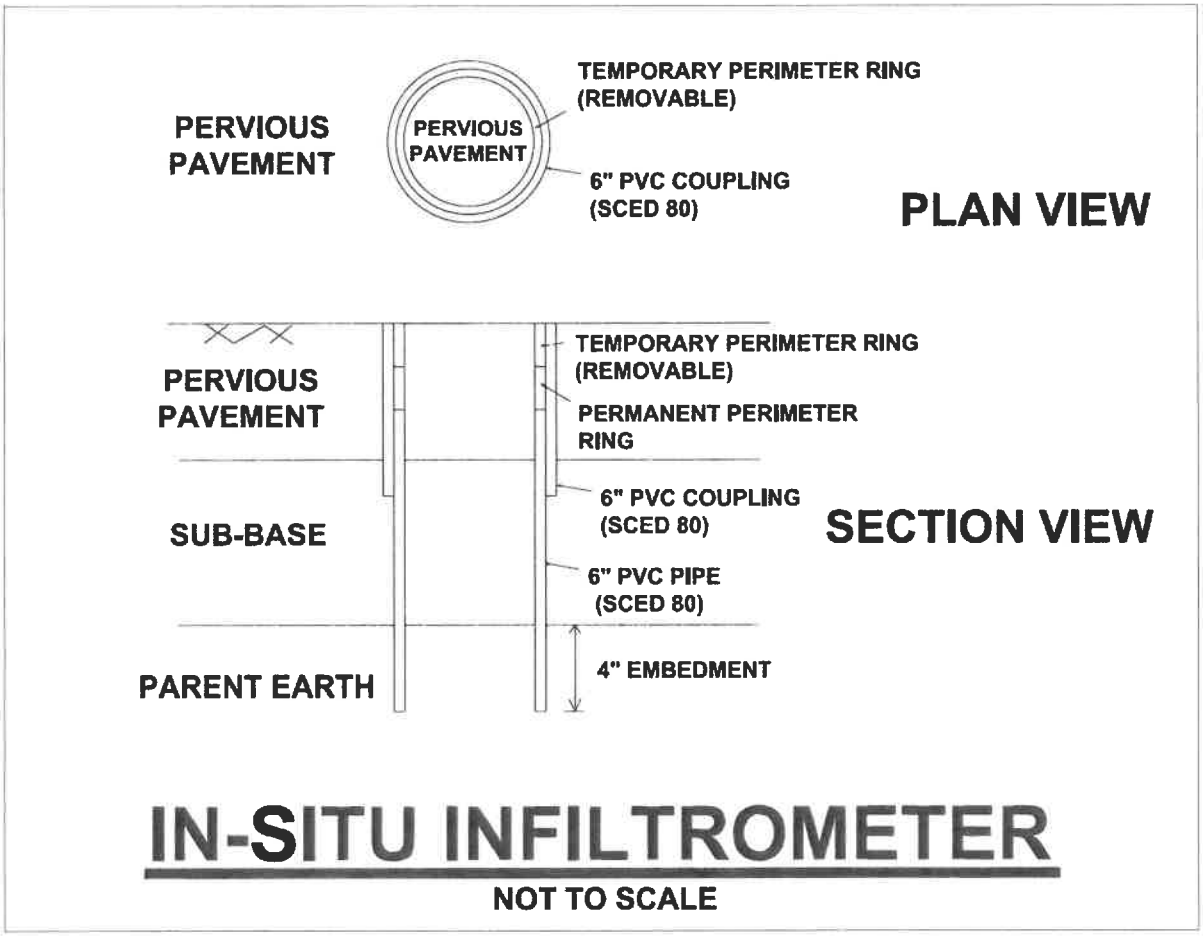

Figure 6.6.5. Plan View of ERIK In-Situ Infiltrometer - (Embedded Ring Infiltration Kit).

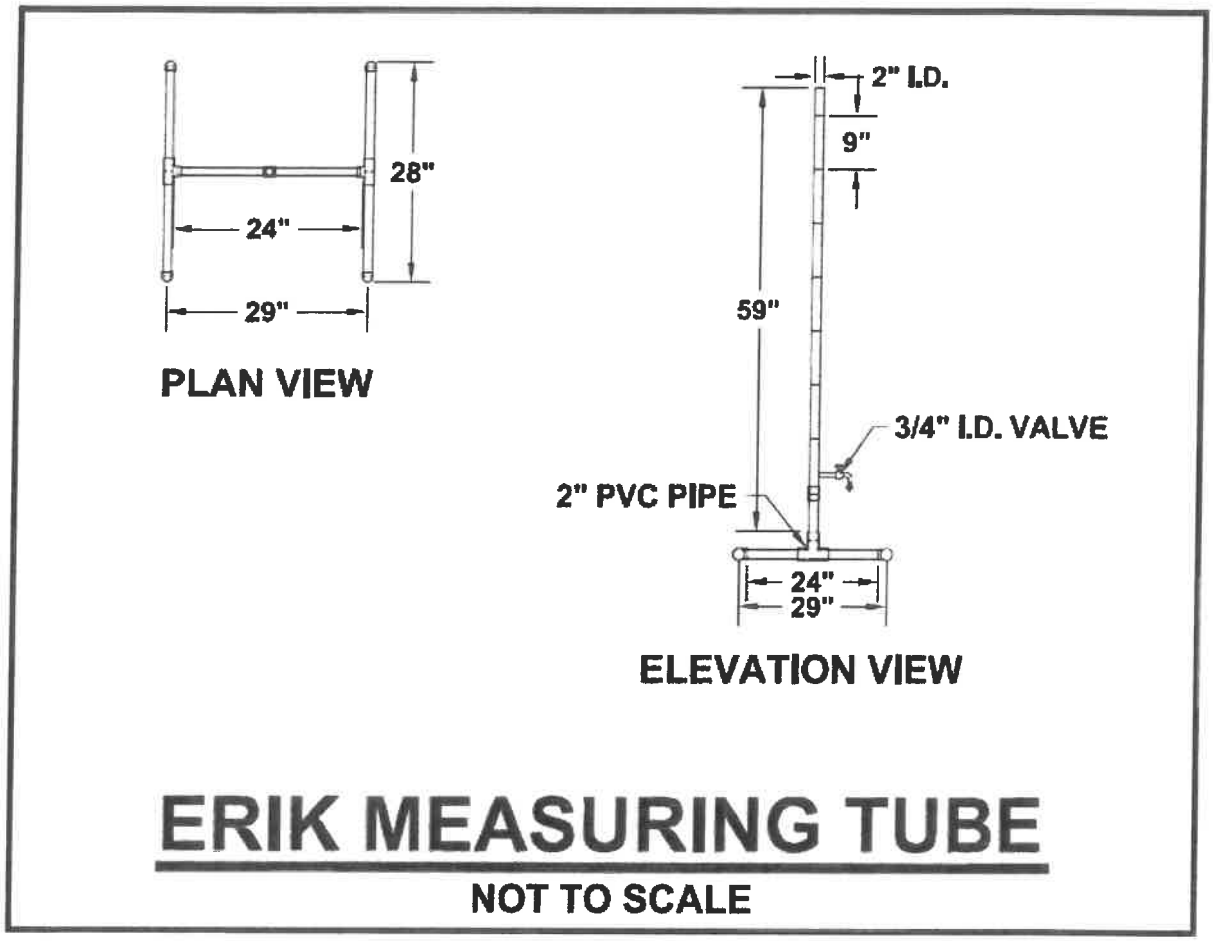

Figure 6.6.6. ERIK Measuring Tube.

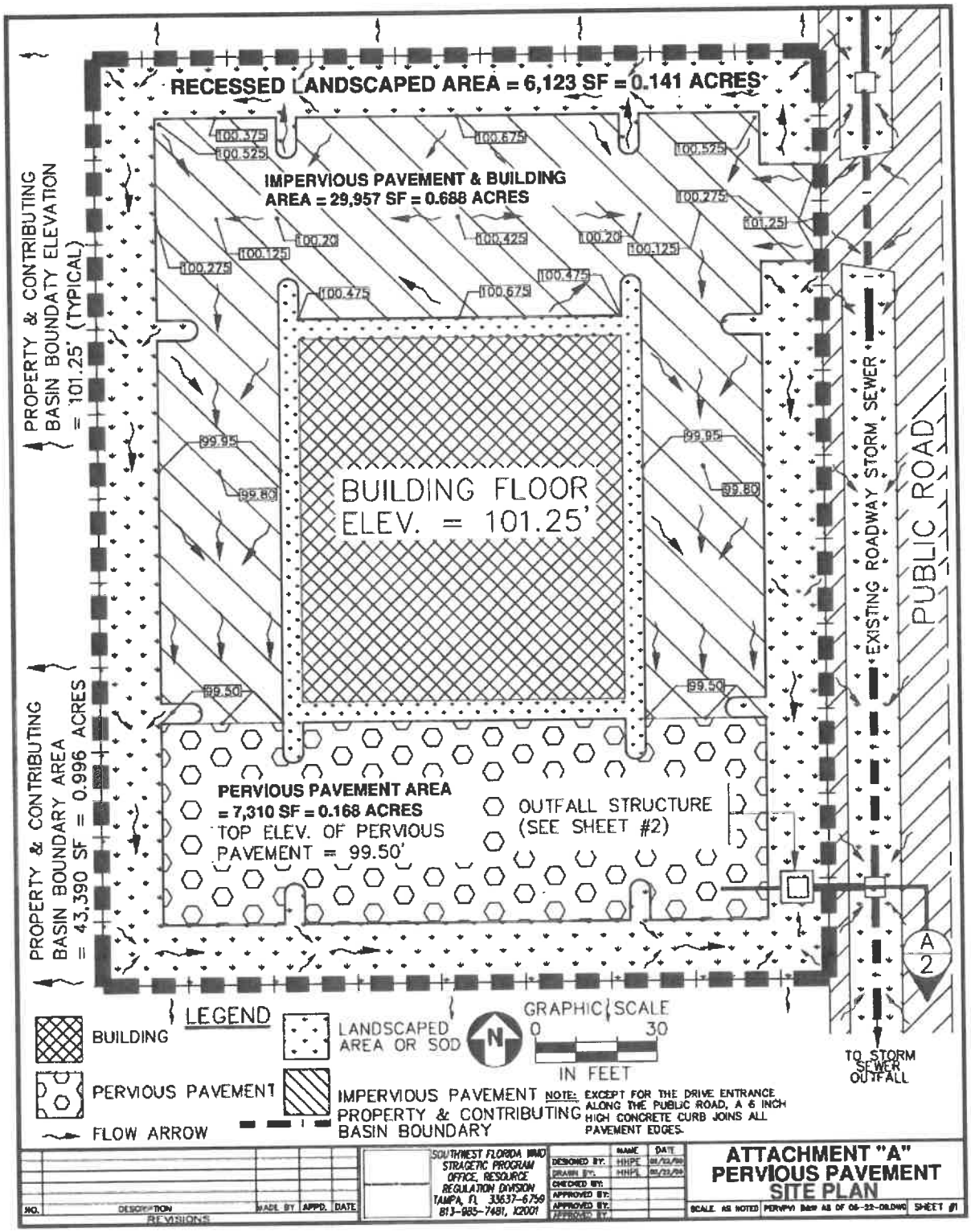

Figure 6.6.7. Pervious Pavement Site Plan.

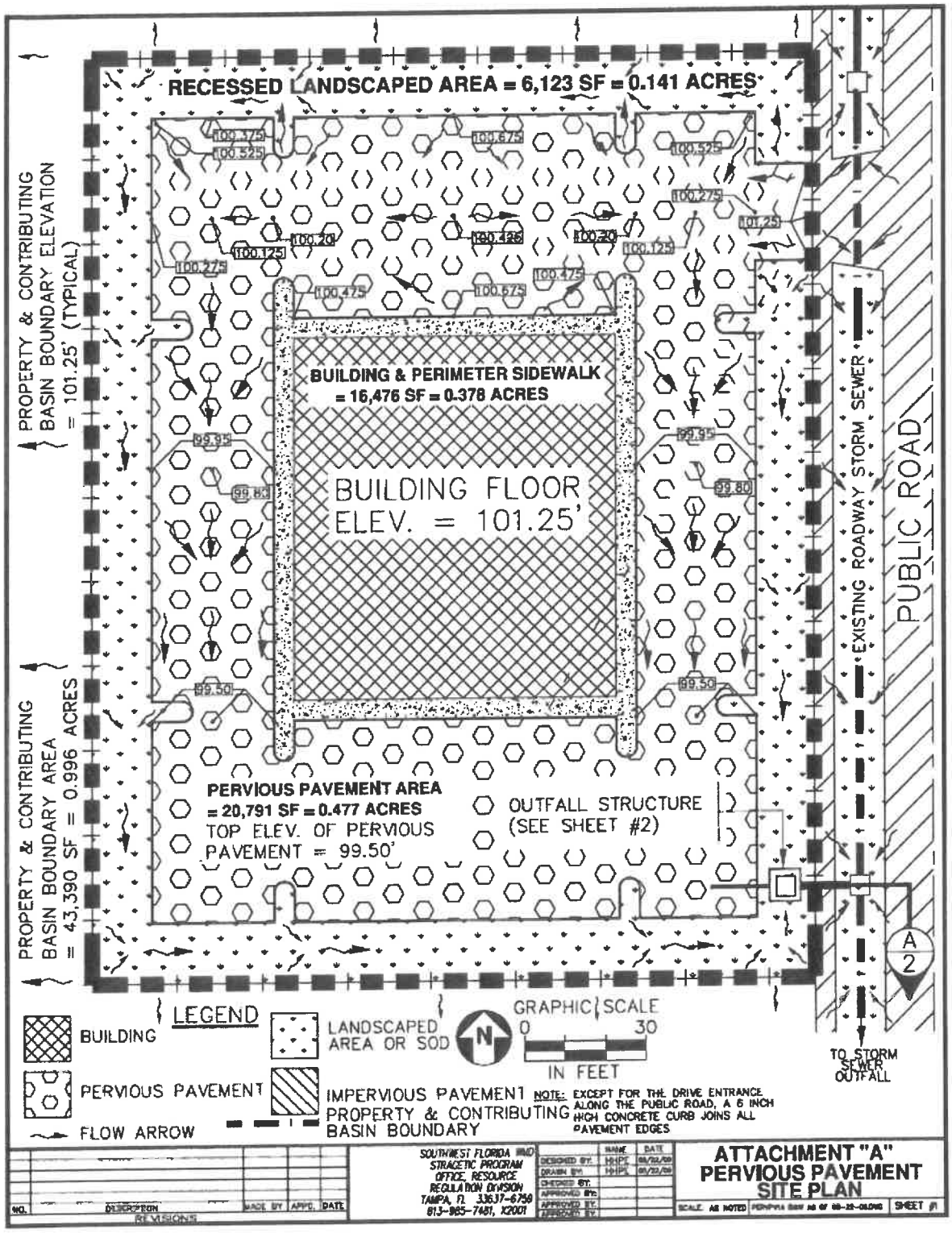

Figure 6.6.8. Pervious Pavement Site Plan.

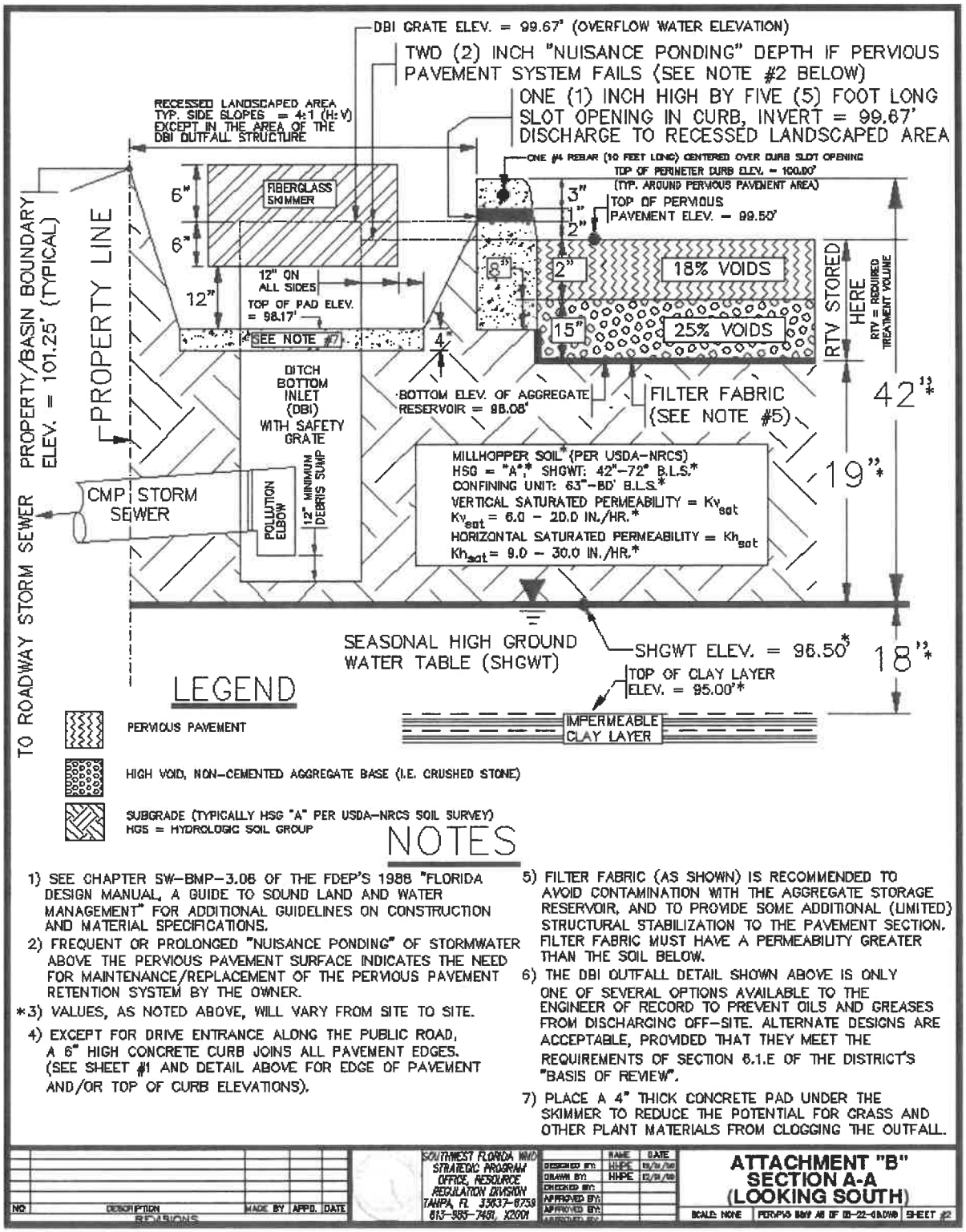

Figure 6.6.9. Pervious Pavement Site Plan

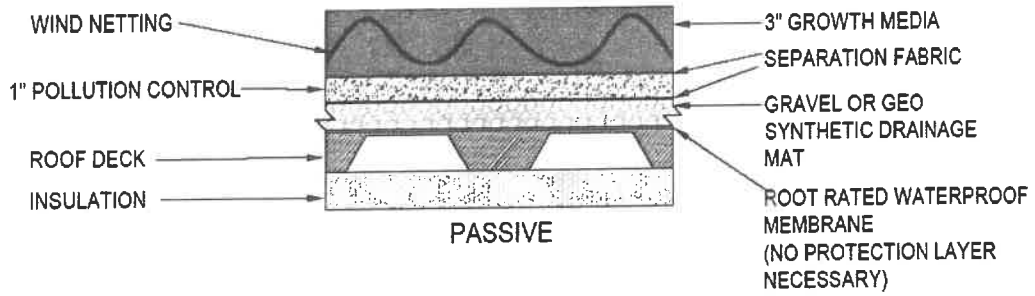

Figure 6.7.1a. Extensive Greenroof Section (Usually Passive Function)

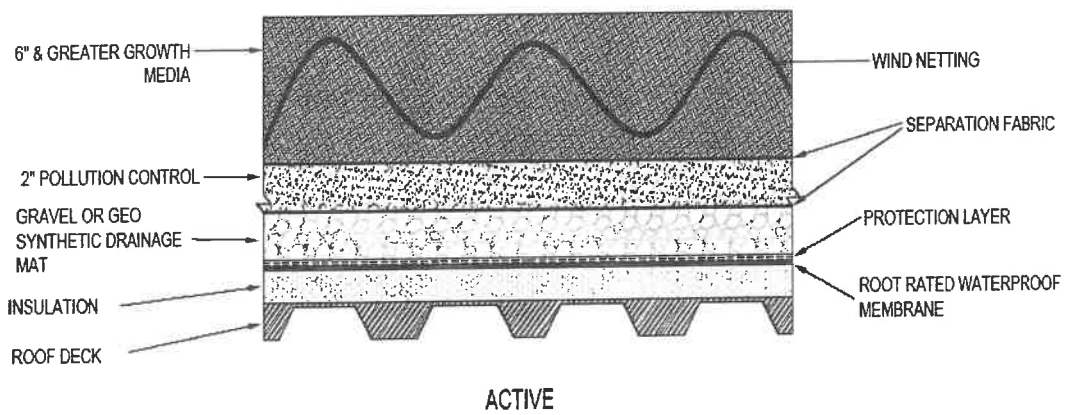

Figure 6.7.1b. Intensive Greenroof Section (Usually Active Function

6.7.5. Design Criteria

(a) Greenroof/cistern systems shall be designed to capture and use the required treatment volume for irrigation without discharge except to downstream BMPs if used as part of a BMP treatment train.

(b) ***Structural Integrity*** – a structural engineer must certify that the roof can support the weight load of the greenroof system.

(c) ***Waterproof Membrane*** - A waterproof membrane layer must be incorporated into the roof system to protect the structure from moisture damage. There are several options for this layer such as, polypropylene or polyethylene membrane, polyvinyl chloride, or spray applied elastomeric waterproofing membrane as well as others. The applicant must check with the membrane manufacturer to ensure that the membrane is rated as a root protection material. All permitted design specifications and manufacturer's installation directions shall be followed to ensure that the proposed product will function as intended with greenroof overburden.

(d) ***Drainage Layer*** - The major function of the drainage layer is to facilitate lateral movement of the filtrate to the point of drainage to ensure no standing water is present. The drainage layer can consist of several different materials such as gravel, recycled products, or geo-synthetic drainage mats. It is important to

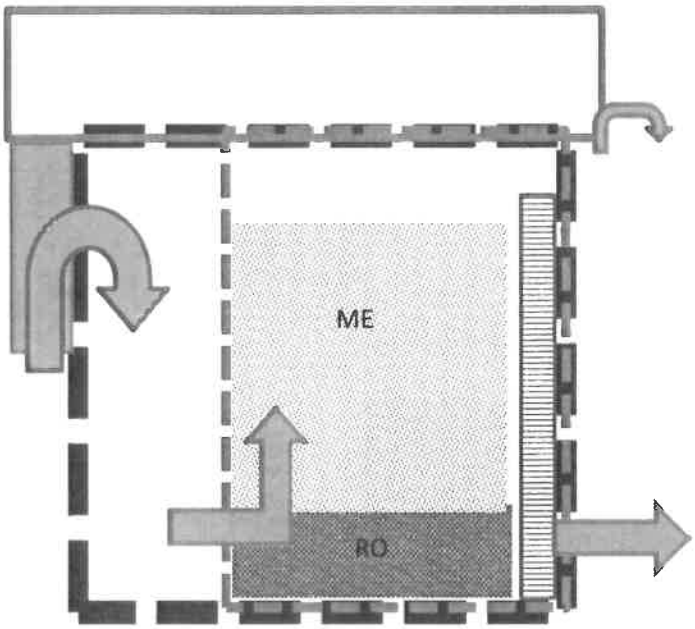

Figure 6.10.2. Typical Schematic of an Up-flow Filter after Wet Detention with Water Flow Direction.

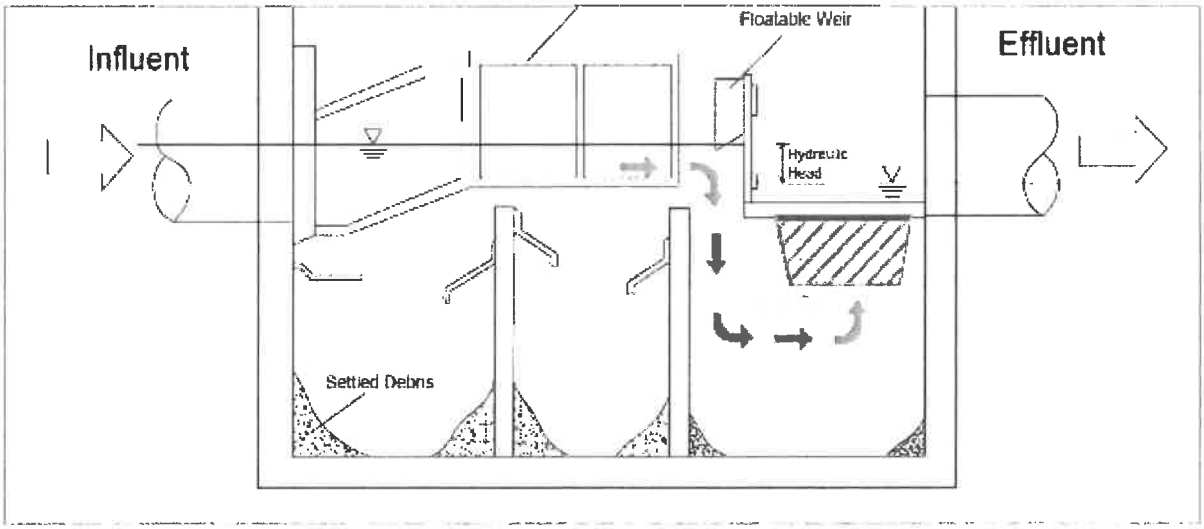

Figure 6.10.3. Typical Schematic of an Up-flow Filter after Vault Detention with Water Flow Direction.

6.12.3. Applicability

1. **Water quantity control**

   Biofiltration systems are designed primarily as BMPs for addressing stormwater quality. Although biofiltration systems will provide some attenuation of peak flows, they will most likely not provide sufficient storage capacity to meet County or SWFWMD water quantity control criteria.

2. **Water quality control**

   Biofiltration systems use the chemical, biological, and physical properties of plants, microbes, and soils or engineered media (BAM) to remove stormwater pollutants. Treating stormwater by biofiltration can be very effective due to the variety of chemical, physical, and biological removal mechanisms.

   Biofilters may be especially useful in highly urban areas where land for wet detention systems is scarce and soils are inappropriate for retention systems. Biofilters may be especially useful in highly urban areas where land for retention or wet detention systems is scarce and soils are inappropriate for retention systems. For example, roof runoff can be effectively detained and treated in a containerized biofilters such as a planter box. Parking lot runoff can be routed into shallow depressed landscape islands with curb cuts or into biofilters integrated into the landscaping adjacent to the parking lot. Figures 6.12.1 through 6.12.5 provide illustrations of the several types of biofiltration systems.

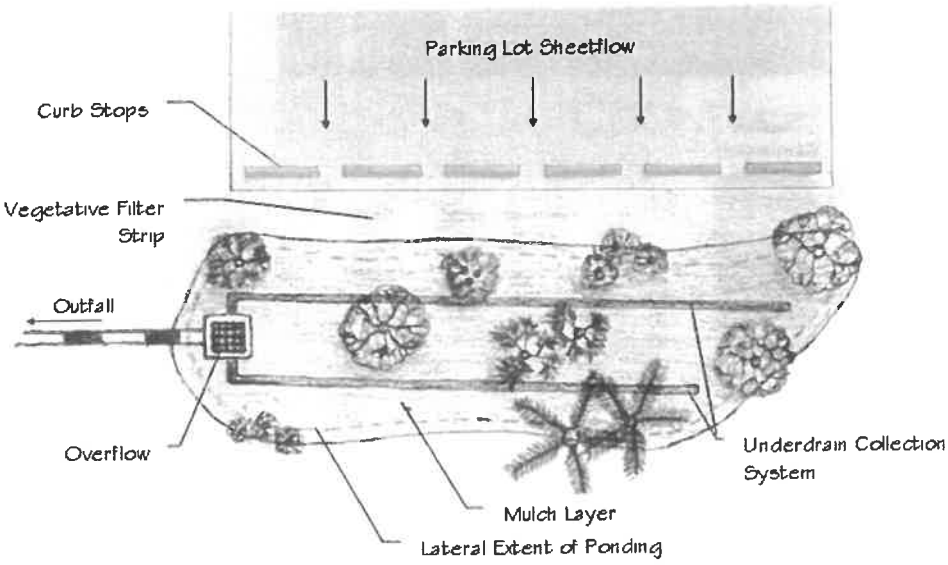

Figure 6.12.1. Plan View Illustrating a Biofiltration System.

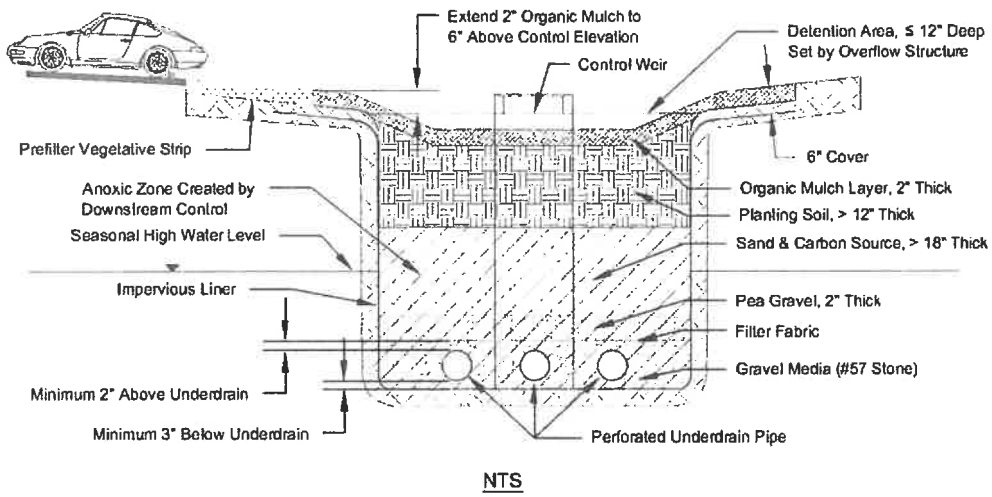

Figure 6.12.2. Cross Section View of a Biofiltration System.

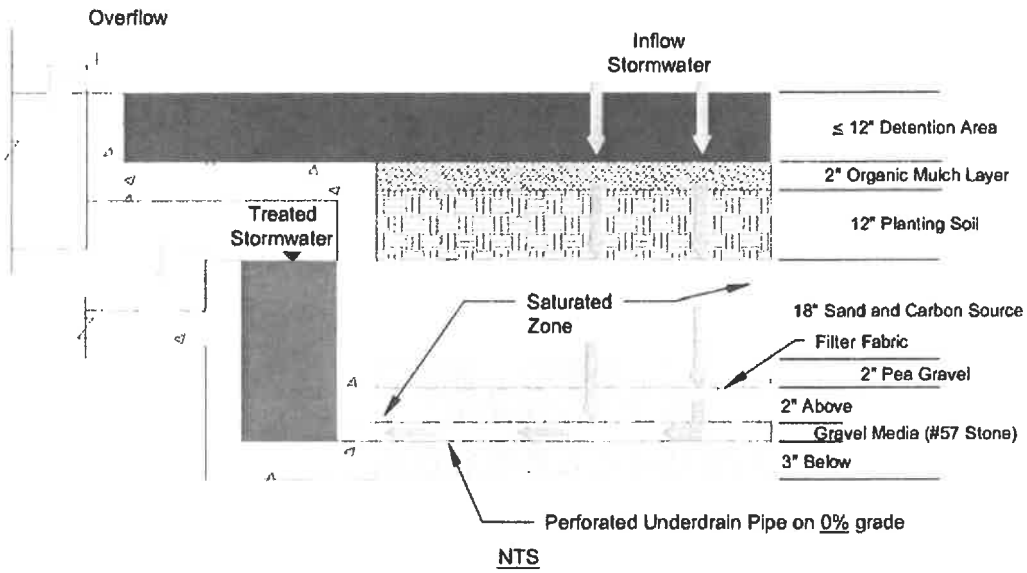

Figure 6.12.3. Cross Section View of System with Overflow.

Stormwater Planter CD

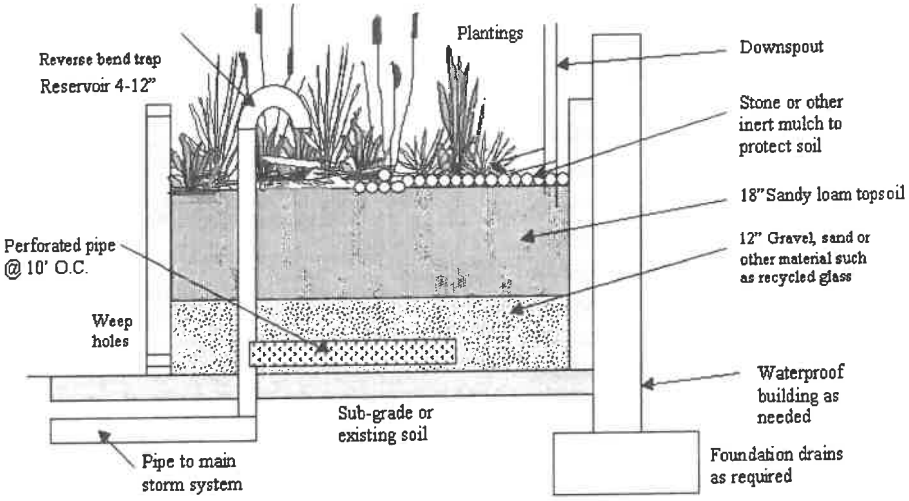

Section Not to Scale

Figure 6.12.4. Stormwater Planter Box Biofiltration System.

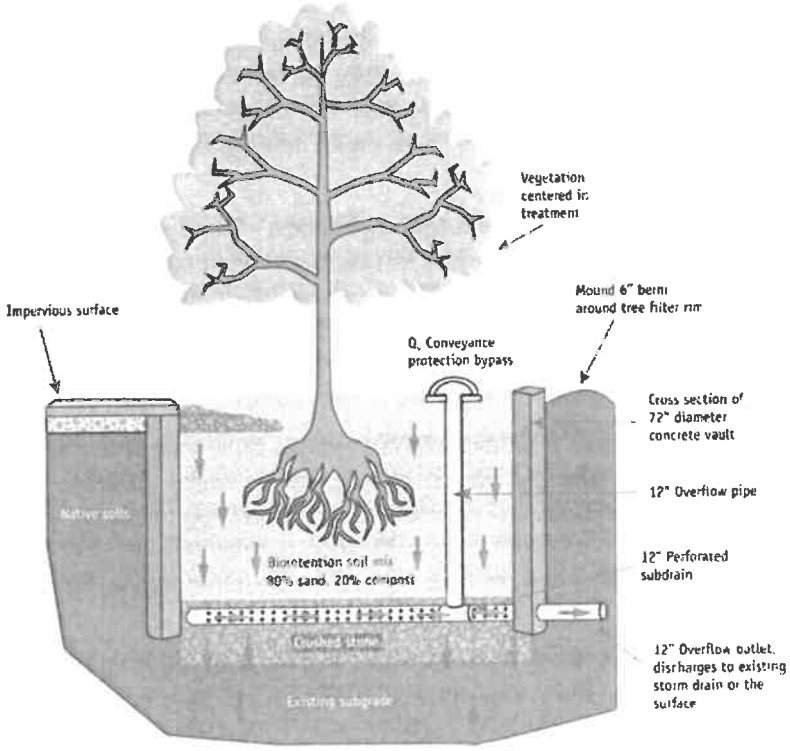

Figure 6.12 5. Stormwater Tree Box Filter System.

6.12.8 Planter Box Biofiltration Systems

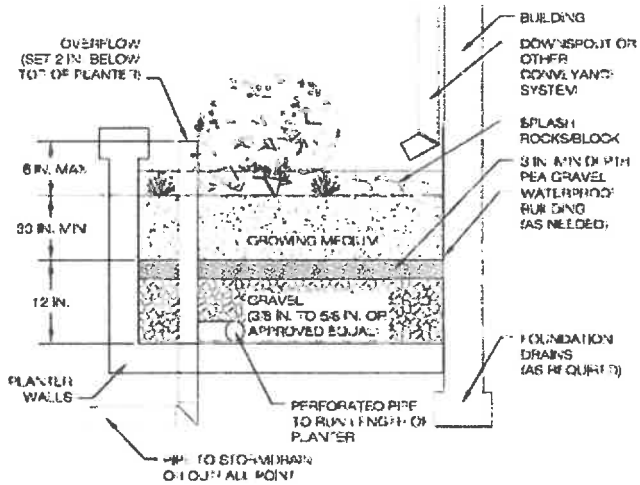

All of the above requirements for biofiltration systems apply to Planter Box biofilters unless they are superceded by specific requirements below.

1. **Description** - Planter box biofilters are structural landscaped reservoirs used to collect and filter stormwater, allowing pollutants to settle and filter out as the water percolates through the vegetation, growing medium, and gravel. Excess stormwater collects in a perforated pipe at the bottom of the flow through planter and drains to an approved discharge point and conveyance. Planters can be used to help fulfill a site's required landscaping area requirement and should be integrated into the overall site design. Numerous design variations of shape, wall treatment, and planting scheme can be used to fit the character of a site. Because flow-through planters can be constructed immediately next to buildings, they are ideal for sites with setback requirements, poorly draining soils, or other constraints.

2. **Setbacks** - Biofiltration planters that rely on infiltration are typically set back 5 feet from property lines and 10 feet from building foundations. No setbacks are required for lined flow-through planters where the height above finished grade is 30 inches or less. Lined flow-through planters can be used next to foundation walls, adjacent to property lines, or on slopes when they include a waterproof lining.

3. **Contributing drainage area** - The maximum contributing drainage area is 2,500 sq. ft. However, this is considered a general rule. Larger drainage areas may be allowed by Pinellas County if the biofiltration system has sufficient flow controls and other mechanisms to ensure proper function, safety, and community acceptance. The drainage areas in these urban settings are typically considered to be 100% impervious.

4. **Planter biofiltration system sizing and pollutant load reduction** - Planter biofiltration systems that use infiltration and are not underdrained can be sized similar to retention basins by using Table 6.1.2 to determine the desired treatment volume. The treatment volume will then determine the annual load reduction percentage. If the biofiltration system requires an underdrain and discharge off-site, the area of the biofiltration system will be determined by the desired treatment volume and the biofiltration media characteristics. These, in turn, will determine the pollutant load reduction.

5. **Dimensions and slopes** - The minimum infiltration planter width is 30 inches, and the minimum flow-through planter width is 18 inches (measured from inside the planter walls). Storage depth must be between 6 and 12 inches (from inlet elevation of overflow to top of growing medium). Planters are flat facilities that do not slope more than 0.5 percent in any direction. A minimum of 2 inches of freeboard (vertical distance between the design water surface elevation and overtopping elevation) shall be provided.

4. **Planter walls** - Planter walls shall be made of stone, concrete, brick, or other durable material. For planters that require an impervious bottom, a single-pour concrete solution is preferred. Chemically treated wood that can leach out toxic chemicals and contaminate stormwater shall not be used.

5. **Liners** - Flow-through facilities that require an impervious bottom can be achieved through either a waterproof liner (geomembrane) or a single-pour concrete box. If lined, there are many liner options, and installation varies. Liners should be installed to the high water mark. Liner shall be 30 to 40- mil PVC or HDPE as appropriate or approved equivalent.

6. **Vegetation** - The entire planter box filter must be planted with vegetation. The facility area is equivalent to the total area of the planter, as developed in the sizing calculations. The entire surface area of a planter is inundated with water and therefore requires plants that will survive such conditions. Minimum quantities are shown below:

Minimum Vegetation Quantities

NUMBER OF PLANTS	*TYPE OF PLANTS*	*PER SQUARE FEET*	*SIZE*	*SPACING ON CENTER*
115	Herbaceous	100	1 gallon	1'
OR				
100	Herbaceous	100	1 gallon	1'
4	Small shrubs	100	1 gallon	2'

Water Quality Treatment Process

1. Runoff flows into the tree filter basin from the street and passes into the filter media.

2. In the filter media, biological treatment occurs through the uptake of pollutants, such as nitrogen and petroleum hydrocarbons, by vegetation and soil microorganisms. Physical and chemical treatment also occurs within the soil media. Other treatment unit processes include sedimentation and sorption with organic matter and mineral complexes.

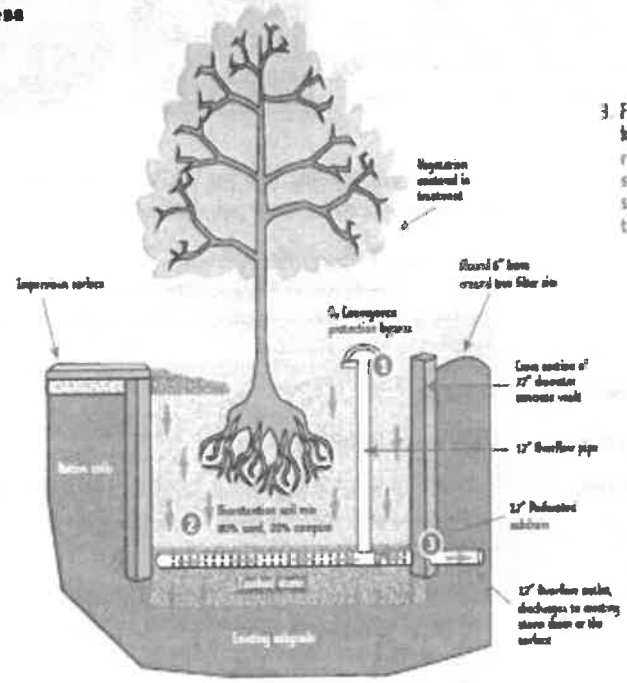

3. Filtered runoff is collected in a perforated subdrain and returned to a storm drain system, infiltrated into the subgrade, or discharged to the surface.

Note: Tree planting is not required in planters but is encouraged where practical. Tree planting is also encouraged near planters.

7. **Construction Considerations** - Special attention should be paid to the structural waterproofing if the planter is constructed adjacent to building structures.

6.13. Rain Gardens

6.13.1. Description

Rain gardens are small retention basins that can be integrated into a site's landscaping. A rain garden is a shallow, constructed depression that is planted with deep-rooted Florida-Friendly™ plants. It is located in the landscape to receive runoff from hard surfaces such as a roof, a sidewalk, a driveway, or parking area. Rain gardens slow down the rush of water from these impervious surfaces, holds the water for a short period of time and allows it to naturally infiltrate into the ground.

Rain gardens have multiple functions. They recharge the local aquifer by increasing the amount of water that filters into the ground; reduce the amount of stormwater pollutants – fertilizer, pesticides, car oil, etc. – that enter nearby surface water bodies; provide habitat for birds, butterflies, and beneficial insects; and improve property value by adding curb appeal to the landscape. Rain gardens are a beautiful and colorful way for homeowners, businesses and municipalities to help ease stormwater pollution problems. A rain garden also conserves municipal water resources by reducing the need for potable water irrigation.

RAIN GARDEN SUMMARY

Advantages/Benefits	Reduces stormwater volume and pollutant loadings; provides ground water recharge and enhanced site aesthetics; integrate into site's landscaping.
Disadvantages/Limitations	Small contributing drainage area. Do not construct within 50 feet of a public or private potable water supply well or within 15 feet of an onsite wastewater disposal and treatment system. Site must have appropriate soil and SHGWT conditions for infiltration.
Volume Reduction Potential	Medium
Pollutant Removal Potential	High for all pollutants
Key design considerations	SHGWT at least 2 feet below bottom; recovery of treatment volume within 24 – 72 hours; plant with Florida-Friendly plants appropriate for dry and wet conditions.
Key construction and maintenance considerations	Minimize soil compaction and sedimentation during construction; ensure design infiltration is met after construction; inspect during wet season to see if water is ponding and not infiltrating properly; restore mulch, remove weeds, and replant as necessary.

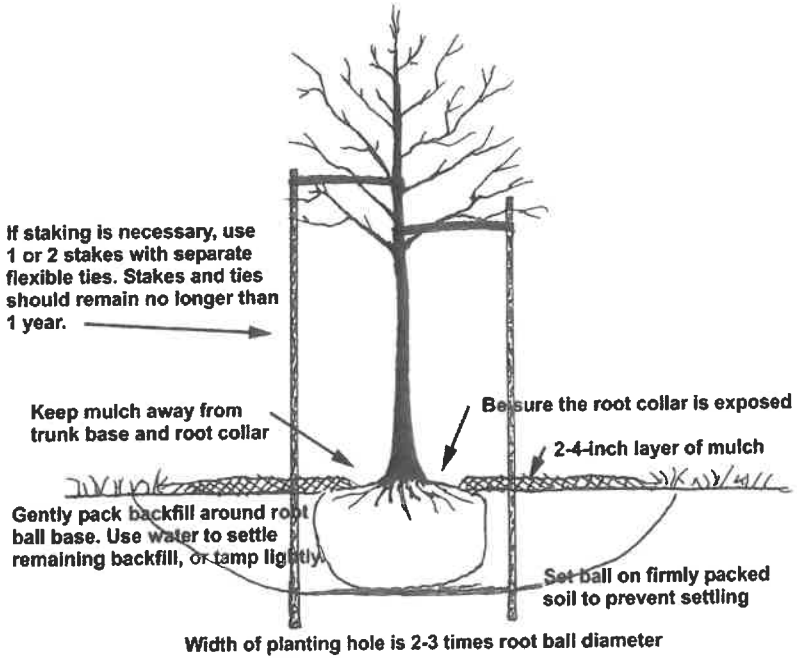

Figure 6.15.1. Tree planting guidelines. (Adapted from Flott, 2004 and ISA, 2003b).

9. **Post-Planting Tree Protection.** Once the tree has been properly planted, 2 to 4 inches of organic mulch must be spread over the soil surface out to the drip line of the tree. If planting a cluster of trees, mulch the entire planting area. Slow-decomposing organic mulches, such as shredded bark, compost, leaf mulch, or wood chips provide many added benefits for trees. Mulch that contains a combination of chips, leaves, bark, and twigs is ideal for reforestation sites. Grass clippings and sawdust are not recommended as mulches because they decompose rapidly and require frequent application, resulting in reduced benefits.

   For well-drained sites up to 4 inches of mulch may be applied, and for poorly drained sites a thinner layer of mulch should be applied. Mulch should never be more than 4 inches deep or applied right next to the tree trunk; however, a common sight in many landscaped areas is the —mulch volcano. This over-mulching technique can cause oxygen and moisture-level problems, and decay of the living bark at the base of the tree. A mulch-free area, 2- to 3-inches wide at the base of the tree, must be provided to avoid moist bark conditions and prevent decay (ISA, 2003a).

10. **Limitations**: Tree credits may not be allowed if site circumstances or system limitations exist.

6.15.6. Construction considerations

1. New trees
   - Do not allow soil in planter areas to be compacted during construction.
   - Do not allow soil in planter areas to become contaminated with construction related materials such as lime or limestone gravel, concrete, sheetrock, or paint.
   - Install irrigation system according to proper specifications.

- The depths to the water table and confining unit (i.e., clay or hardpan) below the bottom of the retention BMP, and
- The soil's saturated hydraulic conductivity.

The following paragraph briefly describes the two stages of infiltration, and subsequent subsections present accepted methodologies for calculating infiltration rates and recovery times for unsaturated vertical (Stage One) and saturated horizontal (Stage Two) flow.

Initially, the subsurface conditions are assumed to be:

- The depth to the initial water table below the bottom of the BMP.
- Unsaturated soils above the water table.

When the water begins to infiltrate, it is driven downward as unsaturated flow by the combined forces of gravity and capillary action. Once the unsaturated soil below the BMP becomes saturated (fills the voids in the soil), the water table begins to "mound" (refer to **Figure A.1.1, Ground Water Mounding Beneath a Retention System, below.**

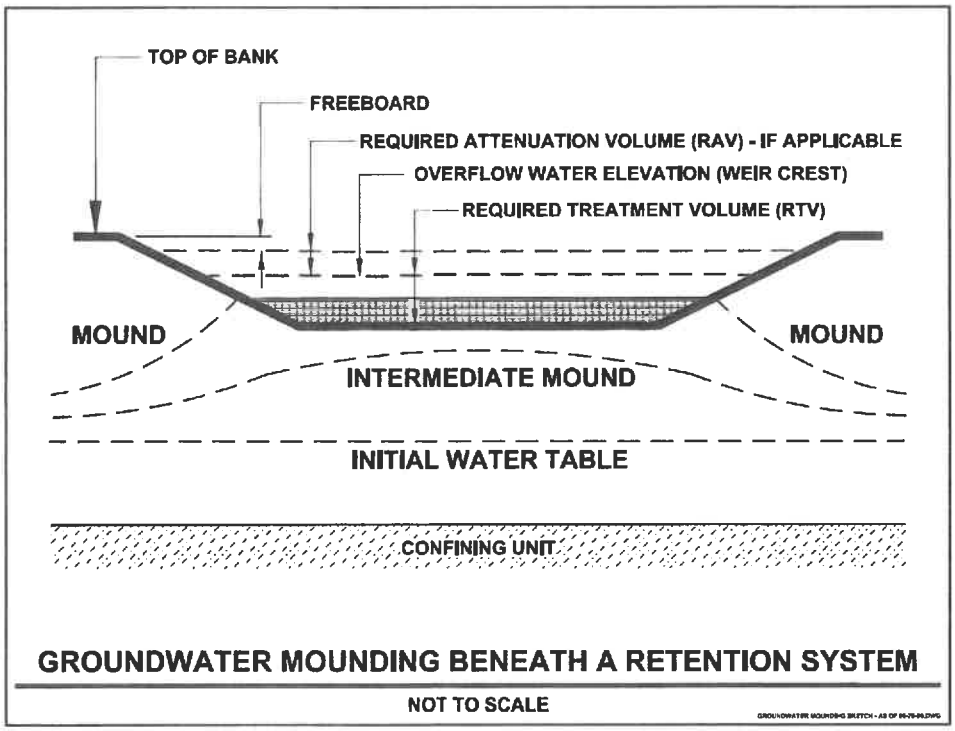

A.1.5. Accepted Methodologies for Determining Retention BMP Recovery

A. Acceptable methodologies for calculating retention BMP recovery are presented below in **Table A.1.1.**

Table A.1.1. Accepted Methodologies for Retention BMP Recovery

Vertical Unsaturated Flow	Horizontal Saturated Flow
Green and Ampt Equation	Simplified Analytical Method
Hantush Equation	PONDFLOW
Horton Equation	Modified MODRET
Darcy Equation	
Holton Equation	

Several of these methodologies are available in commercial software products. The Agencies can neither endorse any software program nor certify software results.

B. Additional requirements for calculating retention BMP recovery

Unless the normal Seasonal High Ground Water Table (SHGWT) is greater than or equal to 2 feet below the bottom of the BMP system, unsaturated vertical flow prior to saturated horizontal mounding shall be conservatively ignored in the recovery analyses. This is not an unrealistic assumption since the height of the capillary fringe in fine sands is on the order of six (6) inches, and a partially mounded water table condition may be remnant from a previous storm event.

A.1.6. Requirements, Guidance and Recommendations for Manual Computations or Computer Simulations

Computer-based ground water flow models are routinely used by practicing engineers and hydrogeologists to predict the time for percolation of the Required Treatment Volume (RTV). The reliability of the output of these models cannot exceed the reliability of the input data. **Input data assessment is probably the most neglected single task in the ground water modeling process.** The accuracy of computer simulations hinges on the quality and completeness of the input data.

The computer models listed in the previous section require input values of the retention BMP dimensions, retained stormwater runoff volume (the RTV) and the following set of aquifer parameters:

- Thickness or elevation of base of mobilized (or effective) aquifer
- Weighted horizontal saturated hydraulic conductivity of mobilized aquifer
- Fillable porosity of mobilized aquifer
- Ambient water table elevation which, for design purposes, is usually the normal Seasonal High Ground Water Table (SHGWT)

Calculated recovery times are most sensitive to the input value for the aquifer's **saturated hydraulic conductivity.**

A. **Determination of Aquifer Thickness**

Standard Penetration Test (SPT) borings are recommended for definition of the aquifer thickness, especially where the ground water table is deep. This type of boring provides a continuous measure

Exhibit B

PROPOSED ORDINANCE 2020-03

AN ORDINANCE OF THE TOWN OF REDINGTON BEACH, PINELLAS COUNTY, FLORIDA, AMENDING TOWN CODE, CHAPTER 18.5, STORMWATER, BY CREATING AND INSERTING ARTICLE IV, ADOPTING A STANDARD DETAILS MANUAL FOR PUBLIC WORKS AND PRIVATE PROPERTY IMPROVEMENTS WHICH MANUAL ESTABLISHES STANDARD DETAILS FOR ALL WORKS WITHIN THE TOWN'S PUBLIC RIGHTS OF WAY AND FOR COLLECTION, RETENTION AND TREATMENT OF STORMWATER RUNOFF ON PRIVATE PROPERTIES, PROVIDING FOR SEVERABILITY; AND ESTABLISHING AN EFFECTIVE DATE.

WHEREAS, Section 163, Part II, Florida Statutes, establishes the requirements of the Community Planning Act and governs local government comprehensive planning and land development regulations; and

WHEREAS, The Town of Redington Beach adopted its Comprehensive Plan in October 1989, and has periodically revised and amended the Plan in order to ensure it remains current and responds to current needs and opportunities; and

WHEREAS, by Ordinance 2019-10, the Town Amended its Comprehensive Plan to permit an Impervious Surface Ratio of 0.65 (65%) in the Town's Residential Designations; and

WHEREAS, Ordinance 2019-10 also requires the adoption of a Standard Details Manual to establish mitigation techniques to mitigate the higher run off created by the increased permitted Impervious Surface Ratio; and

WHEREAS, The Building Official and Town Planner of the Town of Redington Beach recommended that the Comprehensive Plan be amended to update the impervious surface ratio requirement subject to the adoption of a Standard Details Manual to create mitigating requirements for stormwater management; and

WHEREAS, The Planning Board of the Town of Redington Beach, acting in its capacity as Local Planning Agency, recommends the adoption of the Standard Details Manual; and

WHEREAS, the Board of Commissioners of the Town of Redington Beach desires to implement the recommendations of the Planning Board to adopt a Standard Details Manual;

NOW THEREFORE BE IT ORDAINED, by the Commissioners of the Town of Redington Beach, Florida, in its regular meeting duly assembled on this ___ day of ___, 2020.

Section1. Chapter 18.5 of the Town Code of the Town of Redington Beach is amended by the insertion of Article IV, Standard Details Manual, to read as follows:

ARTICLE IV. STANDARD DETAILS MANUAL

Sec. 18.5-40. Adopted.

The Standard Details Manual for the Town of Redington Beach, Attached as Exhibits A and -A-1 to Ordinance 2020-03 is adopted as the Standard Details Manual for the Town and shall have the full force and effect of law.

Sec. 18.5-41. Enforcement by Building Official.

The Buiding Official is charged with the enforcement of the Standard Details Manual and of Comprehensive Plan Infrastructure Element Policy 2.1.2 as adopted by Ordinance 2019-10.

Sec. 18.5-42. Professional Assistance to Building Official.

The Building Official may confer with engineers and with professionals in other relevant fields to provide comprehensive review and approval of drainage plans and specifications for any project that increases the impervious surface ratio on the subject property.

Section2. If any section, subsection, sentence, clause, provision or word of this Ordinance is held unconstitutional or otherwise legally invalid, same shall be severable and the remainder of this Ordinance shall not be affected by such invalidity, such that any remainder of the Ordinance shall withstand and severed provision, as the Board of Commissioners would have adopted the Ordinance and it's regulatory scheme even absent the invalid part

Section3. This ordinance shall become effective immediately upon final passage and adoption

PASSED AND ADOPTED by the Board of Commissioners of the Town of Redington Beach, Pinellas County, Florida, on this ____ day of _____, 2020.

ATTEST:

_____ _____

Missy Clarke, CMC Town Clerk Nick Simons, Mayor

	Motion	Seconded	Aye	Nay	Absent
Vice-Mayor Kornijtschuk					
Commissioner Dorgan					
Commissioner Steiermann					
Commissioner Will					
Mayor Simons					

AGENDA ITEM 7f.
Resolution 2020-13

FOR DISCUSSION PURPOSES ONLY AS COMPANION TO ORDINANCE 2020-14 RESOLUTION TO BE REFERRED TO FINANCE COMMITTEE AND RE-REVIEWED BY PLANNING BOARD PRIOR TO ENACTMENT

RESOLUTION 2020-13

A RESOLUTION OF THE TOWN COMMISSION OF THE TOWN OF REDINGTON BEACH, PINELLAS COUNTY, FLORIDA, SETTING THE STORMWATER UTILITY MANAGEMENT FEE PURSUANT TO TOWN CODE CHAPTER 18.5, ARTICLE II, MAKING RELATED FINDINGS; PROVIDING FOR SEVERABILITY AND ESTABLISHING AN EFFECTIVE DATE

WHEREAS, Article II of Chapter 18.5 of the Town Code establishes and provides for the collection of Stormwater Management Utility Fees; and

WHEREAS, the current Stormwater Management Utility Fee was set in 2006, has not been amended since, and is found in Section 18.5-21 of the Town Code; and

WHEREAS, Section 18.5-21 has been amended to require the Town Board of Commissioners to set the Stormwater Management Fee by resolution; and

WHEREAS, the imposition of a Stormwater Management Fee is an equitable and efficient method of allocating and apportioning the cost of the Town's Stormwater Management Service among parcels of property that are burdening the Town's Stormwater System and thus specially benefitted by provision of the Stormwater Utility; and

WHEREAS, the Town has embarked on a program of capital improvements to its stormwater system, is seeking and has sought and obtained grants for said improvements; and

WHEREAS, the fee established by this Resolution has been reviewed by the Town's Finance Committee and recommended for adoption; and

WHEREAS, the fee established by this Resolution has been reviewed by the Town's Planning Board acting as the Local Planning Agency, and recommended for adoption; and

WHEREAS, this Resolution has been presented to property owners in, and residents of, the Town at public hearings on December 8, 2020, December 16, 2020, *.

FOR DISCUSSION PURPOSES ONLY AS COMPANION TO ORDINANCE 2020-14 RESOLUTION TO BE REFERRED TO FINANCE COMMITTEE AND RE-REVIEWED BY PLANNING BOARD PRIOR TO ENACTMENT

NOW THEREFORE BE IT RESOLVED BY THE BOARD OF COMMISSIONERS FOR THE TOWN OF REDINGTON BEACH, FLORIDA IN A MEETING DULY ADVERTISED AND REGULARLY ASSEMBLED AS FOLLOWS:

Section 1 - Findings.

1. The foregoing recitals are affirmed as findings of fact by the Town Board.

2. The Town's stormwater engineer has calculated a fee of * per unit to be equitable and appropriate taking into account the proposed expenditures for the stormwater system set out in the Town's Schedule of Capital Improvements in the Capital Improvements Element of the Town's Comprehensive Plan and in the Town's stormwater system planning.

3. The Town's Finance Committee and Planning Board concur that the fee established by this Resolution is equitable and appropriate.

Section 2 - Fee Established,

The Stormwater Utility Fee established by established by Article II of Chapter 18.5 of the Town Code is the rate of * per month multiplied by the number of dwelling units, hotel or motel units, and/or business units exsting on each parcel of record.

Section 3 - Severability.

Any portion of this Resolution deemed unconstitutional or otherwise invalid at law is severable from the remainder hereof.

Section 4 - Effective Date

This Resolution shall become effective immediately upon final passage and adoption.

PASSED AND ADOPTED by the Board of Commissioners of the Town of Redington Beach, Pinellas County, Florida, on this ___ day of _____, 2021.

AGENDA ITEM 7g.
Ordinance 2020-10

FLORIDA MUNICIPAL SERVICES
c/o 17425 Gulf Blvd.
Redington Shores, FL 33708
(727) 202-6825

December 7, 2020

Meeting Date: December 8, 2020
Agenda Item 7.g
Advertised Public Hearing

M E M O R A N D U M

TO: Redington Beach Planning Board

FROM: Bruce Cooper, CBO, CFM, Building Official
R. Bruce McLaughlin, AICP, MCIP, Town Planner

SUBJECT: Proposed Ordinance 2020-10, Fire Code Amendment

Ordinance 2020-10 adopting the current Florida Fire Prevention Code is a land development regulation:

> (26) "Land development regulations" means ordinances enacted by governing bodies for the regulation of any aspect of development and includes any local government zoning, rezoning, subdivision, **building construction,** or sign regulations or any other regulations controlling the development of land, except that this definition does not apply in s. 163.3213. [Emphasis Added]

Section 162.3164(26), F.S.

In turn, "development" is defined:

> (1) **The term "development" means the carrying out of any building activity** or mining operation, the making of any material

> change in the use or appearance of any structure or land, or the dividing of land into three or more parcels. [Emphasis Added]

Section 380.04(1), F.S.

Accordingly, Ordinance 2020-10 requires review by the Planning Board/Local Planning Agency to ensure its consistncy with the Town's Comprehensive Plan and for a recommendation.

Ordinance 2020-10 was advertised for a December 8, 2020 public hearing to avoid the cost of a separate newspaper ad, even though it is unrelated to the package of other ordinances on the same agenda. Further, Staff were just recently authorized to meet with the Madeira Beach Fire Chief to discuss the substance of the Town's Fire Code and whether the Town wishes to adopt any local amendments to the Florida Fire Prevention Code.

Accordingly, staff recommends that the public hearing on Ordinance 2020-10 be opened and continued to a date certain so as to preserve the published public hearing date. At the continued public hearing Staff will present the results of their meeting(s) with Madeira Beach Fire officials and any changes to the code as proposed or any local amendments to the Florida Fire Prevention Code that those officials may wish to propose.

BC/RBMcL/m
C:\Red Bch\Planning Board\2020-12-08\RB PB Fire Code 2020-12-08.wpd