TOWN OF REDINGTON BEACH
BOARD REGULAR MEETING AGENDA
WEDNESDAY, January 2, 2019
6:30 P.M.

Town Hall **Assembly Hall**

1. **CALL TO ORDER**

2. **PLEDGE OF ALLEGIANCE**

3. **ROLL CALL**

4. **APPROVAL OF AGENDA**

5. **PUBLIC FORUM: Non-Agenda Items Only** **NOTE:** A three minute time limit applies to all comments from the public on non-agenda items only. If a person wishes to address the Board of Commissioners, please fill out a "Speakers Card" and give it to the Town Clerk prior to the start of the meeting.

6. **REPORTS**

Public Safety	Commissioner Kornijtschuk
Building/Code	Vice Mayor Will
Public Works/Parks	Commissioner Steiermann
Finance	Commissioner Dorgan
Mayor	
Town Clerk	
Attorney Daigneault	
Boards & Committees	

7. **CONSENT AGENDA**
   A. **Board Regular Meeting Minutes, December 19, 2018**
   B. **Bill List for Day Ending December 28, 2018**

8. **OLD BUSINESS**
   A. **Garden Club, Butterfly Garden**
   B. **Ordinance 2018-01: An Ordinance of the Town of Redington Beach, Pinellas County, Florida, Amending the Town Code of Ordinances, Chapter 5-Boats, Docks, and Waterways, Article III. – Bulkheads, Docks, etc., in Boca Ciega Bay, Section 5-56. – Specifications for Seawalls, Bulkheads, and Retaining Walls; Providing for Severability and Establishing an effective date.**

C. **Ordinance 2018-04: An Ordinance of the Town of Redington Beach, Pinellas County, Florida, Amending the Town Code of Ordinances, Chapter 6 – Buildings, and Building Regulations, Article VIII. – Swimming Pools, Section 6-234 – Location; Providing for Severability and Establishing an effective date.**

D. **Ordinance 2018-05: An Ordinance of the Town of Redington Beach, Pinellas County, Florida, Amending the Town Code of Ordinances, Repealing Chapter 1 – Streets, Sidewalks, and other Public Ways; Adopting a new Chapter 19 – Streets, Sidewalks and other Public Ways; Creating Chapter 19.5 – Driveway Connections; Providing for Repeal and Renumbering; Providing for Severability and Establishing an effective date.**

E. **Ordinance 2018-10: An Ordinance of the Town of Redington Beach, Pinellas County, Florida, Repealing Section 12.91 of Article IV of Chapter 12 of the Town Code Regulating Construction Noise; and Amending Chapter 6, Article III, Buildings and Building Regulations of the Town Code by inserting Section 6-68, 6-69, 6-70, and 6-71 Regulating the Hours and Days during which Construction may occur in the Town; Permitting Construction Activities on Saturdays, between the hours of 9:00 a.m. and 3:00 p.m.; permitting owner/builders to undertake certain interior Construction Activities on Sundays; Prohibiting Construction Activities on Designated Federal Holidays; further regulating the use of Heavy Equipment in Construction Activities; Providing for Exceptions to the days and hours during which Construction may occur when such exception will not impair the public health and safety and is in the public interest; providing for severability; and establishing an Effective date.**

F. **Ordinance 2018-12: An Ordinance of the Town of Redington Beach, Pinellas County, Florida, Amending Section 6-125 of the Town Code by correcting a Scrivener's Error and Amending Section 10-10 by inserting a Definition of "Engineer of Record" providing for Severability and Establishing an Effective date.**

9. NEW BUSINESS

A. Resolution 2019-01: A Resolution of the Board of Commissioners of the Town of Redington Beach, Florida, establishing the dates for Town regular commission meetings for Calendar year 2019, and providing for an effective date.

10. OTHER BUSINESS

11. ADJOURNMENT

Note: The Town of Redington Beach Board of Commissioners meet the First and Third Wednesday of each month beginning at 6:30 p.m.

The Town of Redington Beach Board of Commissioners may take action on any matter during this meeting, including items that are not set forth within this agenda.
Minutes of the Board of Commissioners meeting may be obtained from the Town Clerk's office. The meetings may be recorded. The Minutes are not transcribed verbatim. It is the policy of the Board of Commissioners to make "action minutes" of all meetings

Persons requiring a verbatim transcript of any Town meeting (for purposes of appeal or otherwise) should make arrangements to have a certified Court Reporter, at their own cost and expense, present at the meeting.

Persons who wish to appeal any decision made by the Board of Commissioners with respect to any matter considered at this meeting will need a record of the proceedings, and for such purpose may need to ensure that a verbatim record of the proceedings is made, which record includes the testimony and evidence upon which the appeal is based. (F.S 286.0105) **Notice Regarding Special Accommodations: (F.S. 286.26)**

TOWN OF REDINGTON BEACH, FLORIDA
BOARD REGULAR MEETING MINUTES
Wednesday, December 19, 2018
6:30 p.m.

Having been duly advertised as required by law, the **Regular Meeting** of the Board of Commissioners of the Town of Redington Beach, Florida, was held on **Wednesday, December 19, 2018, 6:30 p.m.,** in Redington Beach Town Hall at 105 164th Avenue, Redington Beach Florida.

Mayor Simons called the **Regular Meeting** to order and led the pledge of allegiance.

Roll Call

	Present	Absent
Commissioner Dorgan	X	
Commissioner Kornijtschuk	X	
Commissioner Steiermann	X	
Vice Mayor Will	X	
Mayor Simons	X	
Town Attorney Daigneault	X	
Town Clerk Clarke	X	

Agenda: A motion by Commissioner Kornijtschuk and seconded by Vice Mayor Will to accept the agenda. Motion passed with all ayes.

Public Forum: No Public Forum

Public Safety
- Nothing to Report.

Building
- Nothing to Report.

Public Works
- Nothing to Report.

Finance
- Nothing to Report.

Mayor
- Boat Parade was a success.

Town Clerk
- Nothing to Report.

Town Attorney

- The lawsuit filed by Art Buser and Pamela Graecen is a two-count complaint, one is the placement of a portable bench and the second on the customary use ordinance. A claim has been filed with the Florida League of Cities and they will be paying for the lawyer fees. A trial date has not been set. The Chapman appeal is still pending. The opinions are released on Wednesdays and Fridays and hopes to hear this Friday before the holidays.

Boards and Committees

- Nothing to Report.

CONSENT AGENDA

A. **Board Regular Meeting Minutes, December 5, 2018**
B. **Bill list ending for Day ending December 14, 2018**

A motion by Commissioner Dorgan and seconded by Vice Mayor Will to approve the consent agenda as presented. No public comment. Motion passed with all ayes.

OLD BUSINESS

A. **Land Use Attorney:** Attorney Daigneault referred to the email that was forwarded from Mr. Theriaque.

NEW BUSINESS

A. **First Reading: Ordinance 2018-02: An Ordinance of the Town of Redington Beach, Pinellas County, Florida, Amending the Town Code of Ordinances, Chapter 5 – Boats, Docks, and Waterways, Article III. – Bulkheads, Docks, Etc., in Boca Ciega Bay, Section 5-57. – Specifications for Docks; Providing for Severability and Establishing an Effective Date.** Attorney Daigneault read the ordinance by title only. A Motion by Vice Mayor Will and seconded by Commissioner Dorgan to adopt Ordinance 2018-02. Bruce McLaughlin, town planner stated the request for the change in the ordinance was from Marine Contractors to change the variance process and the length of the docks. The first item would be to allow the variances to be signed off by the neighbors instead of going to the Board of Adjustment for the variance. Also, the contractors are looking to have the docks greater than 30' if allowable.

Jeff Patterson, 1471 Premier Village Way, Clearwater, FL, from the Tampa Bay Marine Contractors Association. He stated that in 2016 there were six variance requests and only three were approved. He would like to see the variance process changed, by having the neighbors sign a notarized variance form instead of the case being heard by the Board of Adjustments. If the neighbors don't sign, then it would go to the variance board. Mayor Simons noted that if a variance is denied, it can be appealed through the court system. Attorney Daigneault explained the procedure.

Jesse Mayer, 16454 Redington Drive stated he is restricted to when he can use his boats because of the tides. He stated that if he had an additional five feet he would be able to use it at any time. Safety is a concern with the boat being beyond the dock.

Town Attorney reviewed the rules of the Board of Adjustment and the criteria that the applicant needs to meet.

Cory Bowers, 2104 Bay Boulevard, Indian Rocks Beach, stated that he had 17 variance requests with Indian Rocks Beach and they changed their by-laws. He stated that this is about the residents, not the contractors.

Brian Burge, 13416 74th Avenue, Seminole is a new marine contractor and wanted to state what a burden the Board of Adjustment hearings are. He stated it should be left up to the neighbors signing off. This is the least restrictive city in the county. The county code is fair.

Doug Speeler, Speeler Marine, and President of the Tampa Bay Marine Contractor's Association, 519 Crystal Drive, Madeira Beach would like to see the process simplified by having the neighbors sign off on and not have to go to the variance board.

Joni McGurk, 11160 8th Street East, Treasure Island, Island Marine Construction had a question on why the town is so adamant on 30' and why there is no compromise.

Mike Miller, Gibson Marine, Tampa, is here on behalf of the residents and wants to make the process easier by having the neighbors sign off on the application instead of going to the variance board.

Public Comment section closed on Ordinance 2018-02. Discussion amongst the board members. It was the decision of the board to keep the dock length to 30' and have the Board of Adjustment hear the variances instead of the neighbors signing off. Roll call vote was taken and motion passed with all ayes.

	Motion	Second	Aye	Nay	Absent
Commissioner Dorgan		X	X		
Commissioner Kornijtschuk			X		
Commissioner Steiermann			X		
Vice Mayor Will	X		X		
Mayor Simons			X		

B. **First Reading: Ordinance 2018-13: An Ordinance of the Town of Redington Beach, Florida, Amending the Town Code of Ordinances by Amending Chapter 21 – Traffic, Vehicles, and Parking, Article II – Stopping, Standing, and Parking, Division 1 – Generally, Section 21-21. Stopping, Standing, or Parking prohibited in certain places; Providing for severability and an effective date.** Attorney Daigneault read the ordinance by title only. A motion by Vice Mayor Will and seconded by Commissioner Kornijtschuk to adopt Ordinance 2018-13. Bruce McLaughlin, town planned stated that this is a repeal of the existing Chapter 19. This will put the ordinance in the correct part of the code. Roll call vote was taken and motion passed with all ayes.

	Motion	Second	Aye	Nay	Absent
Commissioner Dorgan	X		X		
Commissioner Kornijtschuk		X	X		
Commissioner Steiermann			X		
Vice Mayor Will			X		
Mayor Simons			X		

C. **Resolution 2018-15: A Resolution of the Board of Commissioners of the Town of Redington Beach, Appointing Madeira Beach City Manager, Jonathan Evans to serve as the staff appointee to the Penny for Pinellas IV Joint Review Committee on Behalf of the Town of Redington Beach and the entities represented by Seat 11; and providing for an effective date.** Attorney Daigneault read the resolution by title only. A motion by Vice Mayor Will and seconded by Commissioner Kornijtschuk to adopt Resolution 2018-15. Town Clerk reported that a meeting was held to appoint a staff member to the Joint Review Committee that would represent Seat 11. Of the members present, the consensus was to have City Manager Jonathan Evans be the representative. This is a two-year term and will then be passed onto the next alphabetical city, which would be North Redington Beach. Redington Beach would be in line after North Redington. Roll Call vote was taken, and motion passed with all ayes.

OTHER BUSINESS

With no further business, a motion was made by Commissioner Kornijtschuk and seconded by Vice Mayor Will to adjourn. Regular meeting was adjourned at 7:48 p.m.

Adopted: December 19, 2018

_____

Missy Clarke, CMC, Town Clerk

INVOICE APPROVAL LIST BY FUND REPORT

Town of Redington Beach qqqq

Date: 12/28/2018
Time: 12:39 pm
Page: 1

Fund/Dept/Acct	Vendor Name	Invoice #	Invoice Desc.	Check #	Due Date	Posting Date	Amount
Fund: 101 General Fund							
Dept: 512 Town Clerk							
101-512-512.471 Ordinance Codifi							
	CPWG	18103115	ROW Ord. 2018-05	0	11/30/2018	11/30/2018	6,000.00
	CPWG	18113015	ROW Ord. 2018-05	0	12/14/2018	12/14/2018	700.00
							6,700.00
					Total Dept. Town Clerk:		**6,700.00**
Dept: 514 Legal Counsel							
101-514-514.421 Special Magistral							
	HERBERT E LANGFORD JR.,	Stolz Case 18.01	Stolz Case # 18.01	0	12/21/2018	12/21/2018	1,620.00
							1,620.00
					Total Dept. Legal Counsel:		**1,620.00**
Dept: 521 Law Enforcement							
101-521-521.340 Law Enforcement							
	PINELLAS COUNTY SHERIFF	663132	Law Enf Serv. Jan 2019	0	01/01/2019	01/01/2019	21,237.00
							21,237.00
					Total Dept. Law Enforcement:		**21,237.00**
Dept: 572 Parks and Recreation							
101-572-572.522 Gasoline & Oil							
	SHELL	107375	Unleaded	0	12/17/2018	12/17/2018	54.14
	SHELL	107383	Diesel fuel	0	12/17/2018	12/17/2018	26.26
	SHELL	121798	Diesel fuel	0	12/27/2018	12/27/2018	27.00
	SHELL	121772	Unleaded	0	12/27/2018	12/27/2018	33.19
							140.59
101-572-572.524 Fertilizer & Mulch							
	LARSON & SON LANDSCAPE	20427	Shell - Town Park Parking lot	0	12/18/2018	12/18/2018	208.00
	LARSON & SON LANDSCAPE	20431	Shell - Town Park Parking lot	0	12/19/2018	12/19/2018	208.00
							416.00
					Total Dept. Parks and Recreation:		**556.59**
					Total Fund General Fund:		**30,113.59**
Fund: 300 Capital Accounts							
Dept: 539 Department of Public W							
300-539-539.630 Infrastructure							
	CPWG	18113005	Undergrounding Eng. Expense	0	12/14/2018	12/14/2018	4,160.00
							4,160.00
					al Dept. Department of Public Works:		**4,160.00**
					:al Fund Capital Accounts:		**4,160.00**
Fund: 400 Storm Water							
Dept: 535 Storm Water							
400-535-535.441 Utility Mailing Co:							
	PINELLAS COUNTY UTILITIE	90014363	Stormwater Billing	0	12/10/2018	12/10/2018	548.64
							548.64
					Total Dept. Storm Water:		**548.64**
					Total Fund Storm Water:		**548.64**
					Grand Total:		**34,822.23**

12/20/2018		8423	Payroll	277.05
		8424	Payroll	277.05
		8425	Payroll	381.75
		8426	Payroll	277.05
		8427	Payroll	277.05
		8428	Payroll	1,759.15
		8429	Payroll	1,309.67
		8430	Payroll	1,015.44
		8431	Payroll	1,251.87
	EFT		Payroll Liabilities	3,037.40
	EFT		Retirement	2,411.52
				9,025.90

MAYOR SIMONS

VICE MAYOR WILL

COMMISSIONER KORNIJTSCHUK

COMMISSIONER DORGAN

ATTEST:

COMMISSIONER STEIERMANN

Missy Clarke, CMC, Town Clerk

Meeting Date: January 2, 2019
ADVERTISED PUBLIC HEARING
Agenda Item ___

FLORIDA MUNICIPAL SERVICES
18001 Gulf Blvd.
Redington Shores, FL 33708
(727) 202-6825

December 27 2018

MEMORANDUM

TO: Honorable Mayor and Members of the Town Board of Commissioners

FROM: Darin Cushing, CBO, CFM, Building Official
R. Bruce McLaughlin, AICP, MCIP, Town Planner

SUBJECT: Seawall Ordinance Amendments – Ordinance 2018-01

EXECUTIVE SUMMARY

Marine contractors have requested changes to the Seawall Code, § 5-56. The Planning Board heard the contractors' presentation by Reuben Clarson, P.E., in March, 2018, found the ordinance to be consistent with the Comprehensive Plan, and recommended its approval. Based on Mr. Clarson's work, staff developed revisions to § 5-56, incorporating recommendations by the Planning Board and by the Town Engineer and changes by the Town Attorney. The Ordinance was adopted on first reading on December 5, 2018. Staff recommends **ADOPTION ON SECOND AND FINAL READING OF THE ATTACHED ORDINANCE SUBJECT TO COMMENTS THAT MAY BE RECEIVED AT THE PUBLIC HEARING.**

BACKGROUND

Applicant: Various marine contractors active in the Town have requested a text amendment to the Town Code governing seawalls and bulkheads.

Location: All waterfront properties in the Town.

THE REQUEST

The marine contractors requested changes to the various technical provisions of the current Seawall Code. The requested changes not only modernize the Code, but they also significantly enhance the code to current standards and norms.

This amendment also presented the opportunity to modernize the code by changing the measurement point for vertical elevations from NGVD, 1929 (National Geodetic Vertical Datum established in 1929) to NAVD, 1988 (North American Vertical Datum established in 1988). NAVD is a superior and more accurate benchmark. Section 10.10 of the Town Code, construction related definitions, is amended by Ordinance 2018-02, pending before the Town Board, to define NAVD.

HISTORY

On March 6, 2018, the Planning Board heard the presentation by Mr. Clarson on behalf of the marine contractors but took no concrete action on the proposal. Mr. Clarson's proposals both relaxed standards that were too stringent and strengthened standards that were insufficiently stringent. Subsequently, on April 10, 2018, the Planning Board found proposed Ordinance 2018-01 to be consistent with the Town's Comprehensive Plan and recommended its approval.

The Town Engineer has reviewed the contractors' request and was generally in accord with most suggestions but made some suggestions both with respect to the proposed technical specifications and with respect to the wording of the proposal. These suggestions have been incorporated into the draft ordinance but Staff deferred to Mr. Clarson where the Town Engineer's suggestions were incompatible with those of Mr. Clarson.

The Town Attorney's office has also reviewed the draft ordinance and the comments from that review have been incorporated into the attached draft Ordinance. The Ordinance was adopted on first reading on December 5, 2018.

NOTICE

The Town Clerk's office will advise as to the notice given of this proceeding.

AUTHORITY

Pursuant to §§ 4 and 5 of the Town Charter, the Town is governed by the Board of Commissioners which may exercise all powers available to a municipality under the Constitution and laws of the State of Florida. Those powers include preparing, adopting and amending land development regulations, including the regulation of seawalls.

COMPREHENSIVE PLAN CONSISTENCY

There are very few relevant Comprehensive Plan policies that apply to the construction of seawalls, but the requested changes are generally consistent with the following Comprehensive Plan policies, both from the Conservation and Coastal Management Element:

> **Goal 1**: To ensure the highest environmental quality possible, the Town of Redington Beach shall conserve, protect and appropriately manage its natural resources (aquatic, wetland, and terrestrial).

The amendments to the seawall ordinance, as discussed herein, will help the Town to appropriately manage the seawall/water interface.

> **Policy 1.3.3**
> Projects (e.g., marinas, causeways, and dredging) which could inhibit tidal circulation shall include measures to maintain or improve tidal circulation and flushing.

The proposed amendments will not result in any additional inhibition of tidal circulation.

Based on the foregoing analysis, the Planning Board found proposed Ordinance 2018-01 to be consistent with the Town's Comprehensive Plan.

ANALYSIS

The Town's Seawall Code is sourced back to the 1980 code with amendments in 2001 and 2016 with the former adding provisions for vinyl seawalls and the latter being a very minor change

deleting the requirement for epoxy coating on reinforcing rods. Based on the substance of the Code, it appears to have been developed in the mid-1950s as one of the Town's early codes.

Changing engineering requirements and construction methods are not reflected in the Town's current Seawall Code and should be reflected in the Code. The marine contractors, working in the Town on a regular basis, identified the deficiencies in the current code and commissioned Mr. Clarson to effectively draft a rewrite of the Code. Mr. Clarson has done so, as noted above, strengthening code provisions that were insufficient and relaxing or eliminating outdated or overly stringent requirements.

Due to potential scheduling issues, Mr. Clarson made the applicants' presentation to the Town Board at its advertised public meeting of December 5, 2018. Highlights of Mr. Clarson's presentation include:

- the current ordinance is from the 1950s and needs to be brought into the modern world;
- the Town needs to get out of the engineering business and the associated liabilities;
- the revised ordinance provides for modern day materials and construction;
- the proposed ordinance establishes appropriate reliance on the engineer of record;

An emphasis by Mr. Clarson, supported by the Town Engineer, was to recognize that the Code cannot anticipate, and therefore cannot prescribe for, every condition that might be found in seawall construction in the Town. Accordingly, Mr. Clarson and the Town Engineer recommended placing the onus for design effectiveness on the Engineer of Record for each project, subject to the approval of the Building Official.

In contrast, the Town Attorney's office wanted to reduce the discretion granted to the applicant's engineer. Staff believe that the attached draft strikes a reasonable compromise between enforceability and flexibility in design, with the recognition that the Florida licensed engineer of record has substantial ethical, professional and financial liabilities associated with the design of a seawall and is not going to jeopardize his or her professional standing with shoddy work. The fact that the Code leaves the final decision with the Building Official, who may, per the Building Code, seek outside advice, further guarantees that the engineering will be appropriate.

December 27 2018

STAFF RECOMMENDATION

THAT THE ATTACHED ORDINANCE BE ADOPTED ON SECOND AND FINAL READING SUBJECT TO COMMENTS THAT MAY BE RECEIVED AT THE PUBLIC HEARING.

DC/RBMcL/m

Town of Redington Beach
ORDINANCE NO. 2018 – 01

AN ORDINANCE OF THE TOWN OF REDINGTON BEACH, PINELLAS COUNTY, FLORIDA, AMENDING THE TOWN CODE OF ORDINANCES CHAPTER 5 – BOATS, DOCKS AND WATERWAYS, ARTICLE III. – BULKHEADS, DOCKS, ETC., IN BOCA CEIGA BAY, SECTION 5-56. – SPECIFICATIONS FOR SEAWALLS, BULKHEADS AND RETAINING WALLS; PROVIDING FOR SEVERABILITY AND ESTABLISHING AN EFFECTIVE DATE.

WHEREAS, the Board of Commissioners of the Town of Redington Beach desires to more effectively regulate any repairs to any existing and the erection of newly constructed seawalls; and

WHEREAS, the Board of Commissioners of the Town of Redington Beach finds that such regulation is in the best interests of the public health, safety and welfare; and

WHEREAS, the Board of Commissioners of the Town of Redington Beach has determined that the amendment of Section 5-56. – Specifications for seawalls, bulkheads and retaining walls – is necessary to effectively regulate same; and

WHEREAS, the Town's Planning Board, which serves as its Local Planning Agency, has found this Ordinance to be consistent with the Town's Comprehensive Plan and has recommended approval of the amendment to further consistency with the Town's Comprehensive Plan;

NOW, THEREFORE BE IT ORDAINED by the Board of Commissioners of the Town of Redington Beach, Florida, that:

Section 1. The foregoing whereas clauses are incorporated herein by reference and made a part of hereof.

Section 2. This ordinance amends Chapter 5 – Boats, Docks and Waterways, Article III. – Bulkheads, Docks, Etc., in Boca Ciega Bay, Section 5-56, specifications for seawalls, bulkheads and retaining walls as follows:

Sec. 5-56. - Specifications for seawalls, bulkheads and retaining walls.

(a) *Generally*. Any seawall, bulkhead, or retaining wall hereafter constructed within the territorial limits of the T~~t~~own shall be designed, laid out, and constructed in conformance with the duly and lawfully established bulkhead line after the plans, specifications, standards, and design shall first have been submitted, analyzed, and approved by the B~~b~~uilding O~~o~~fficial as

required by this article. Such construction shall be contiguous with the existing adjacent bulkhead or seawall line if such line exists, or within 18" face to face of vertical walls, if possible, when installed in front of an existing seawall, and shall be of strong and durable materials, design, and construction, built in a good, substantial, and workmanlike manner. All seawalls shall be tied back or restrained in accordance with the specifications approved by the Engineer of Record.

For the purposes of this Section, the "Engineer of Record" is defined in Section 10-10 of the Town Code.

For the purposes of this Section, DWYDAG construction means high strength tieback rods.

All seawalls shall be designed by a Florida licensed Professional Engineer who shall be the Engineer of Record. All designs, specifications, determinations, instructions, requirements, and decisions by the Engineer of Record shall be subject to the concurrence of the Building Official, which concurrence shall not be unreasonably withheld.

(b) *Location.* All seawalls, bulkheads, or retaining walls shall be erected on the property line closest to the water, according to the last recorded plat thereof, or within 18" as referenced above. Only one such waterward extension shall be permitted.

(c) *Structures constructed on waters other than the Gulf of Mexico.* Unless for good cause based on reasons of public safety wherein a specified exception is granted by the board of commissioners, seawalls, bulkheads, and retaining walls constructed or altered, projected, or prolonged on or adjacent to waters other than the Gulf of Mexico shall be of masonry, or aluminum, vinyl, or composite construction in compliance with the minimum standards set forth in this subsection. ~~and shall be installed in about zero to minus one degree elevation of mean low tide.~~

(1) *Masonry seawalls.* Seawalls, retaining walls, and bulkheads that are constructed of concrete will utilize the tongue and groove or other approved method of sheet-pile-type construction with poured-in-place concrete cap and tie-back anchors. The concrete shall have a minimum test strength of 3,500 pounds per square inch at 28 days, and all reinforcing steel shall be covered with a minimum of ~~two~~ three inches of concrete. All concrete and reinforcing steel shall be minimum of FDOT type #1 or 3,500 pounds per square inch at 28 days or higher as specified by the Engineer of Record.

a. Concrete slabs may be precast of prestressed and designed for the appropriate exposed height and loading by the Engineer of Record. Minimum thickness must be 6 inches. ~~The concrete sheet piling shall have a minimum thickness of 5 5/8 inches and contain vertical steel reinforcement equivalent in cross sectional area~~

~~to one #4 deformed reinforcing bar spaced at eight inches on center. Each slab shall have two #4 steel hairpins extending into the cap a minimum of three inches. The edges of all slabs shall be mating tongue and groove with an approved filter system.~~

b. The poured-in-place concrete cap shall not be less than ~~9½~~ 12 inches in thickness or less than 16 inches in width. Design will be determined by the Engineer of Record. (See Section 5-56(d): stress beams and span beam caps).

c. The cap shall contain continuous horizontal steel reinforcement ~~equivalent in cross sectional area to four #4 deformed reinforcing bars~~ as designed by the Engineer of Record in accordance with industry accepted standards and practices, and subject to the approval of the Building Official. At no place shall reinforcing bars be closer than ~~two~~ three inches to the exterior face of the concrete cap. The #3 or larger stirrups for the continuous reinforcing bars shall be placed at a ~~minimum~~ maximum of 24 inches on center. All splices shall be lapped not less than 40 diameters; provided, however, that the steel shall not be continuous through expansion joints. The reinforcing steel shall have sufficient ~~steel~~ ties to hold the rods in a horizontal position and properly spaced from the forms. Expansion joints shall normally be provided every ~~40~~ 50± feet except on the outside radii, which may be farther apart~~, up to 60 feet~~ per the Engineer of Record's design. Expansion joints shall be placed over slab joints.

d. ~~All the tie-back rods~~ Tieback rods shall be hot dipped galvanized (HDG) or epoxy coated~~-~~steel encased in compatible diameter PVC pipe and shall ~~have a cross sectional area~~ be equal to or greater than a ~~# 8 reinforcing bar~~ 1" diameter for tierods with deadmen anchors holding the main seawall. One-inch diameter aluminum tieback rods or the appropriate sized DWYDAG tie rods, as determined by the Engineer of Record, may also be used. If Manta Ray anchors are used, the tierods may be ¾" or 1" diameter per the required loading, as determined by the Engineer of Record. All such rods shall be spaced not more than ten feet on center or per the Engineer of Record's design. The length of all tie rods shall be equal to or greater than two times the height of the seawall slab projecting above the mud line. In no case shall the tie rods be of shorter length than ~~12~~ 10 feet, unless they are connected to cantilevered piling anchors which can be closer to the seawall. Manta Ray anchors must provide adequate pull-back loading as determined by the Engineer of Record.

e. All anchors shall be poured-in-place concrete containing not less than ~~4½~~ 6 cubic feet of concrete, and shall have not less than ~~4½~~ 6 square feet of vertical surface perpendicular to the alignment of the tie rod. Each anchor shall contain vertical and horizontal steel reinforcement ~~equivalent in cross sectional area to four #4~~

~~deformed reinforcing bars per square foot in each direction~~ per the Engineer of Record's design. The anchors shall have a minimum of ~~three feet~~ 30 inches of earth cover or a minimum depth as specified by the ~~building official~~ Engineer of Record's design. Manta ray anchors or helical anchors may be used per the Engineer of Record's design with the tension or torque stated on the plans. Torque testing shall be done by the contractor subject to the approval of the Engineer of Record.

f. The penetration of each seawall slab into firm ground shall be in accordance with an approved plan prepared by the Engineer of Record. Such penetration shall be equal to 0.67 times the height of the wall above the mud line or 0.4 times the total length of the slab, whichever is greater. In no case shall the seawall slab be of shorter length than eight feet or greater if soil conditions warrant, as determined by the Engineer of Record. If rock or very firm clay is encountered and the above criteria cannot be met, the Engineer of Record may require trenching or other remedies, subject to the approval of the Building Official.

g. The elevation for all seawalls, bulkheads, and retaining walls fronting on the bay shall be equal to or greater than an elevation of ~~five feet, NGVD~~ 4.12 feet, NAVD, as defined in Section 10.10 of this Code, mean sea level.

(2) *Aluminum seawalls.* ~~Aluminum seawalls shall not have an exposed height of more than five feet.~~ Aluminum Seawalls shall be constructed as follows.

a. Sheet piles shall be fabricated from aluminum alloy 5052-H141, conforming to ASTM designation B209 alloy 5052 for chemical composition; also having a minimum thickness of 0.125 inches and minimum tensile strength of 35,500 pounds per square inch. Corrugations shall have a minimum nominal nine-inch pitch, and nominal 2½-inch depth. The penetration into firm ground shall be equal to 0.67 times the height of the wall above the mud line, or 0.4 times the total length of the sheet, whichever is greater. In no case shall the total sheet be less than six feet in length. ~~Where sheet lengths required are more than 8½ feet, and when soil conditions, surcharges and other factors exceed the scope of these standard specifications, a special design shall be submitted, signed and sealed by a state-registered engineer.~~ The size and length of the sheets is to be determined by the Engineer of Record for the site conditions and loading.

b. The cap may be an aluminum extrusion designed to fit the designed aluminum sheet piles and installed per the manufacturer's recommendations. The poured-in-place concrete cap shall not be less than ~~9½~~ 12 inches in thickness or less than 16 inches in width with the full cross-section of concrete formed and

poured. Filter fabric or cheese cloth draped over the sheets is not permitted. (See Section 5-56(d), stress beans and span beams.)

c. The cap shall contain continuous horizontal steel reinforcement ~~equivalent in cross sectional area to four #4 deformed reinforcing bars~~ as designed by the Engineer of Record. At no place shall reinforcing bars be closer than three inches to the exterior face of the concrete cap. The #3 stirrups for the continuous reinforcing bars shall be placed at a ~~minimum~~ maximum of 24 inches on center. All splices shall be lapped not less than 40 diameters; provided, however, that the steel shall not be continuous through expansion joints but be 3 inches from the cap expansion join material. The reinforcing steel shall have sufficient steel ties to hold the rods in a horizontal position and properly spaced from the forms. Expansion joints shall normally be provided every ~~40~~ 50 ± feet or as determined by the Engineer of Record and be over sheet interlocks.

d. Anchor rods and deadman anchor plates shall be fabricated from aluminum alloy 6061-T6, conforming to ASTM designation B221 alloy 6061 for chemical composition, also having a minimum thickness of anchor plates of 0.10 inch and minimum tensile strength of 38,000 pounds per square inch. The size of the anchor plates shall be designed by the Engineer of Record ~~not less than 1½ by 2½ feet equipped with a three-inch by 2¼-inch backing channel 0.25 inch thick and 1½ feet long~~. Anchor plates shall be placed with the top at least ~~two feet~~ 30 inches below the elevation of the wall cap. The anchor rods shall be not less than 0.75 inch in diameter. and shall be equipped with a rod sleeve, nut and curved washer where they pass through the cap. Anchor rods shall be installed continuously along the wall at a ~~maximum~~ spacing ~~of 6½ feet~~ and a length determined by the Engineer of Record. The minimum length shall be ~~twelve~~ ten feet. One tie-back system shall be constructed at each end of the wall and thereafter one tie-back system shall be constructed ~~six feet, six inches on center~~ throughout per the design. All tie rods shall be pre-tensioned after placement of backfill around anchor plates, but before final backfill of sheeting. Such pre-tensioning shall not tend to move the sheets or anchors. ~~Tie rods shall be placed in the coping so that the anchor pull brings the coping in direct contact with a bayside corrugation of the wall sheeting.~~

HDG PVC encased steel tieback rods with 6 inch by 6 inch by ½ inch HDG plate washers and nuts may be used with concrete deadmen or Manta Ray anchors as long as the steel tierods and washers are isolated from the aluminum sheets with a plastic or neoprene material. Tie rods shall be placed in the coping so that the anchor pull brings the coping in direct contact with a bayside corrugation of the wall sheeting with the washers against the outside portion of the corrugation or in the same location in the cap if not against the outside corrugation of the sheet.

Tieback rods may also be #8 Grade 60 plain rebar PVC encased with a 90-degree bend 12" long each end.

e. ~~Surcharge from fill behind the wall shall be controlled by limiting the slope to a maximum of ten degrees, and prohibiting objects other than landscaping to be located closer than five feet from the wall cap.~~ The ~~minimum~~ standards described in this subsection assume sandy soil with an angle of repose of thirty ~~forty-five~~ degrees for soil against the wall. They also assume that the environment is not highly alkaline or acidic. If conditions require a design in excess of limitations specified in this subsection, the wall shall be of concrete, vinyl, or composite construction, in accordance with subsection (c)(1) of this section.

f. ~~If the aluminum material is brought in contact with mortar or concrete, a coating of clear methacrylate lacquer shall be applied to the aluminum contact surface to prevent corrosion. The edges of all sheet piles shall be mating tongue and groove with an approved filter system.~~ There shall be no dissimilar metals or metal systems bonded to the wall. If there is no option but to use dissimilar materials, such materials shall be coated in a manner prescribed by the Engineer of Record.

(3) *Vinyl and composite seawalls*

Vinyl seawalls. All vinyl and composite seawalls shall have ~~a minimum thickness of .4 inches or approximately three-eighths of an inch~~ an allowable section modulus per the manufacture's specifications greater than the section modulus calculated per the site conditions and loading.

a. Vinyl seawalls shall comply with the following minimum requirements.

1. Tinsel strength 6000 pounds per square inch. Allowable bending stress of 3,200 pounds per square inch.

~~2. Impact strength of 12,5000 pounds per square foot.~~

~~3~~2. ~~Module~~ Modulus of elasticity of 350,000 ~~p.s.i.~~ pounds per square inch.

b. Composite seawalls shall comply with the following minium requirements:

1. Allowable bending stress of 25,000 pounds per square inch.

2. Modulus of elasticity of 4,600,000 pounds per square inch.

~~b~~c. Drains in vinyl or composite seawalls ~~holes of~~ with a minimum of ~~1½~~ 1.25 inch interior diameter shall be installed as prescribed on the plans. Types of drains will be selected by the Engineer of Record, in accordance with the approved drainage plan.

~~c. All plans for vinyl seawalls shall be designed and sealed by a Florida registered engineer.~~

~~d~~c The poured in-place-cap shall be a minimum of 12" thick ~~9 ½ inches thick~~ by 16 inches wide or as designed by the Engineer of Record (see Section 5-56(d), stress beams and span beams). It shall contain continuous horizontal steel reinforcement per the Engineer of Record's design ~~equivalent in cross sectional area to six #5 deformed reinforcing bars.~~ At no place shall the reinforcing bars be closer than three inches to the exterior face of the concrete cap. The #3 stirrups for the continuous reinforcing bars shall be placed at a minimum of 12 inches on center. All splices shall be lapped not less than 40 diameters; provided, however, that the steel shall not be continuous through expansion joints. The reinforcing steel shall have sufficient steel ties to hold the rods in a horizontal position and properly spaced from the forms. Expansion joints shall normally be provided every ~~40~~ 50± feet or per the Engineer of Record

~~e~~d. ~~All the tie-back rods shall be steel encased in compatible diameter PVC pipe and shall have a cross sectional area equal to or greater than a #8 reinforcing bar. All such rods shall be spaced not more than eight feet on center. The length of all tie rods shall be 16 feet long.~~

Tieback rods shall be HDG or epoxy coated steel encased in compatible diameter PVC pipe and shall be equal to or greater than 1" diameter for tierods with deadmen anchors holding the main seawall or stress beams. One-inch diameter aluminum tieback rods or the appropriate sized DWYDAG tierods may also be used. If Manta Ray anchors are used, the tierods may be ¾" or 1" diameter per the required loading. All such rods shall be spaced per the Engineer of Record's design. The length of all tie rods shall be equal to or greater than two times the height of the seawall slab projecting above the mud line. In no case shall the tie rods be of shorter length than 10 feet unless they are connected to cantilevered piling anchors which can be closer to the seawall per the Engineer of Record's design.

~~f~~e. All anchors shall be poured-in-place concrete containing not less than six cubic feet of concrete, and shall have not less than six square feet of vertical surface perpendicular to the alignment of the tie rod. Each anchor shall contain vertical and horizontal steel reinforcement ~~equivalent in cross sectional~~ per the Engineer of Record's design.

(d) Stress beams and span beams

If the Engineer of Record determines the seawall can be supported with a stress beam to

be constructed on the seawall at or above the top of the barnacle line, the stress beam will be designed with a reinforced steel cage and either HDG or stainless steel tieback rods with washers embedded in the stress beam concrete to either Manta Ray anchors, concrete deadmen, or cantilevered wood or concrete piling. If pilings are used, there will be a shear connection between the stress beam and the concrete slabs to keep the stress beam from "sliding up the slabs".

Span beams are to be designed for new pool construction (or other obstructions in the failure zone of the seawall) with the appropriate sized reinforced cap, tieback rods, and larger concrete deadmen outside the footprint of the pool or obstruction. If designed by the Engineer of Record, conflicting tieback rods, deadmen, and other types of conflicting anchors may be excavated after the seawall concrete has achieved its design strength.

(~~d~~e) *Structures constructed on the Gulf of Mexico.* All seawalls, bulkheads, or retaining walls constructed, altered, projected, or prolonged on the Gulf of Mexico shall be of ~~masonry~~ concrete or steel construction in compliance with the following minimum standards:

(1) ~~All s~~Seawalls and bulkheads shall be of concrete, utilizing the tongue and groove or other approved method of sheet-pile-type construction, with poured-in-place concrete cap and tie-back anchors. The concrete shall have a minimum test strength of ~~3,500~~ 5,000 pounds per square inch at 28 days and all reinforcing steel shall be covered with a minimum of three inches of concrete. All concrete shall be FDOT type #1.

(2) The concrete sheet piling shall have a minimum thickness of ~~7½~~ 8 inches and contain vertical steel reinforcement equivalent in cross sectional area to #6 deformed reinforcing bars spaced at six inches on center or as designed by the Engineer of Record. Each slab shall have two #6 steel hairpins extending into the cap a minimum of 3 inches or per engineer of record's design. The edges of all slabs shall be mating tongue and groove with ~~an approved filter system~~ a filter fabric or equal behind each slab joint from 1-foot below the outside mud line to the bottom of the cap.

(3) The poured-in-place concrete cap shall not be less than ~~12~~ 18 inches in thickness or less than ~~18~~ 20 inches in width.

(4) The cap shall contain continuous horizontal steel reinforcement ~~equivalent in cross sectional area to four #5 deformed reinforcing bars~~ as per the Engineer of Record's design. At no place shall reinforcing bars be closer than three inches to the exterior face of the concrete cap. ~~Number 3 stirrups for the continuous reinforcing bars shall be placed at a minimum of 24 inches on center.~~ All splices shall be lapped not less than 40 diameters; provided, however, that the steel shall not be continuous through expansion joints. The cap shall also contain ~~not less than four~~ #3 or greater stirrups that encircle the horizontal steel, spaced equally, 12 inches on center. Expansion joints shall normally be provided every 40 feet or as approved by the Engineer

of Record.

(5) All tie-back rods shall be HDG or epoxy coated steel encased in compatible diameter PVC pipe and have a cross sectional area equal to or greater than a #9 reinforcing bar. All such rods shall be spaced not more than ten feet (or less per the design as approved by the Engineer of Record) on center ~~and shall be encased in concrete with a minimum coverage of three inches~~. The length of all tie rods shall be equal to or greater than two times the height of seawall slab projecting above the ground line. In no case shall the tie rods be of shorter length than 16 feet.

(6) The tie-back anchors shall be poured-in-place concrete containing not less than ~~7½~~ 6 cubic feet of concrete, and have not less than ~~7½~~ 6 square feet of vertical surface perpendicular to the alignment of the tie rod. Each anchor shall contain horizontal steel reinforcement equivalent in cross sectional area to four #4 deformed reinforcing bars and be provided with #3 steel stirrups, 12 inches on center, or per the Engineer of Record's design. The anchors shall have a minimum of three feet of earth cover or a minimum depth as specified by the ~~building official~~ Engineer of Record.

(7) The penetration of each seawall slab into firm ground shall be equal to or greater than one-half times the total length of the slab. In no case shall the seawall slab be of shorter length than 12 feet if in contact with the Gulf waters.

(8) The elevation for all seawalls, bulkheads, and retaining walls fronting on the Gulf of Mexico shall be equal to or greater than ~~six feet, NGVD~~ 5.12 feet, NAVD mean sea level.

(f) Measurement points

Unless otherwise specified in this Code, whenever in this code a measurement is required to be taken from a seawall, such measurement shall be taken from the center of the seawall cap.

Section 3. If any section, subsection, sentence, clause, provision or word of this Ordinance is held unconstitutional or otherwise legally invalid, same shall be severable and the remainder of this Ordinance shall not be affected by such invalidity, such that any remainder of the Ordinance shall withstand any severed provision, as the Board of Commissioners would have adopted the Ordinance and its regulatory scheme even absent the invalid part.

Section 4. This Ordinance shall become effective immediately upon final passage and adoption.

PASSED AND ADOPTED by the Board of Commissioners of the Town of Redington Beach, Pinellas County, Florida, on this _____ Day of _____ 201___

ATTEST:

Missy Clarke, CMC Town Clerk

Nick Simons, Mayor

	Motion	Seconded	Aye	Nay	Absent
Commissioner Kornijtschuk					
Commissioner Dorgan					
Commissioner Steiermann					
Vice Mayor Will					
Mayor Simons					

Meeting Date: January 2, 2019
ADVERTISED PUBLIC HEARING
Agenda Item ____

FLORIDA MUNICIPAL SERVICES
18001 Gulf Blvd.
Redington Shores, FL 33708
(727) 202-6825

December 27, 2018

MEMORANDUM

TO: Honorable Mayor and Members of the Town Board of Commissioners

FROM: Darin Cushing, CBO, CFM, Building Official
R. Bruce McLaughlin, AICP, MCIP, Town Planner

SUBJECT: Swimming Pool - Seawall Setback Requirements – Ordinance 2018-04

EXECUTIVE SUMMARY

Modern engineering permits pools and seawalls to be constructed closer than the Town Code requires. Therefore, there have been several variance applications seeking to shorten the distance between pools and seawalls. If accompanied by appropriate engineering, these variances are routinely granted. This standard should thus be varied administratively. The LPA has reviewed Ordinance 2018-04 and found it to be consistent with the Comprehensive Plan and recommended its approval. The Board adopted this Ordinance on first reading on 12/5/18. Staff recommends **ADOPTION ON SECOND AND FINAL READING OF THE ATTACHED ORDINANCE SUBJECT TO COMMENTS THAT MAY BE RECEIVED FROM THE PUBLIC.**

BACKGROUND

Applicant: Town of Redington Beach

Location: All Waterfront Properties in the Town

THE REQUEST

To permit administrative variances to the required setbacks between swimming pools and seawalls when engineering design permits the setback between a swimming pool and a seawall to be shortened.

HISTORY

As property improvements and redevelopment occur throughout the Town, one type of project that is occurring is the replacement of existing seawalls with new seawalls built to modern design standards. Many of these new seawalls are engineered with provisions for the installation of a swimming pool on the same property which installation is in accord with sound engineering principles but not necessarily in accord with the Town Code.

The location of new swimming pools on waterfront properties is regulated by Town Code § 6-234 as set out in the attached proposed ordinance.

The proposed new seawall code, pending before the Board as Ordinance 2018-01, includes the following proposed regulation:

> Span beams are to be designed for new pool construction (or other obstructions in the failure zone of the seawall) with the appropriate sized reinforced cap, tieback rods and larger concrete deadmen outside the footprint of the pool or obstruction. The pool company may excavate for the pool and cut and remove the conflicting tieback rods and deadmen or other types of conflicting anchors after the concrete has achieved the design strength of the concrete.

With the advent of new seawalls, engineered to permit closer proximity of pools, property owners are required to seek variances from the Board of Adjustment (a sample application package is attached to this report), to permit a pool to be constructed closer to a seawall than required by the Code.

Given that the merits of a variance application related to the pool location rest largely on a certification by the engineer of record that a pool can appropriately be built closer to a seawall, and given the proposed changes to the seawall code, it seems appropriate to permit the Building Official to administratively vary the setback requirement to an extent determined by the Board.

This ordinance also provides an opportunity to resolve possible ambiguities with respect to the terms "Gulf-front" and "Waterfront," and to clarify that the required setback is from a side lot line. A redundancy between a definition and an operative provision is also resolved.

Ordinance 2018-04 was found to be consistent with the Town's Comprehensive Plan and recommended for approval by the Planning Board on July 10, 2018. The Ordinance was adopted on first reading on December 5, 2018.

NOTICE

The Town Clerk's office will advise as to the notice given of this proceeding.

AUTHORITY

Pursuant to §§ 4 and 5 of the Town Charter, the Town is governed by the Board of Commissioners which may exercise all powers available to a municipality under the Constitution and laws of the State of Florida. Those powers include preparing, adopting and amending land development regulations, including the regulation of seawalls and swimming pools and their respective locations.

COMPREHENSIVE PLAN CONSISTENCY

Although there are not a lot of relevant Comprehensive Plan policies, the requested changes are generally consistent with the following Comprehensive Plan Goal from the Conservation and Coastal Management Element:

> **Goal 1**: To ensure the highest environmental quality possible, the Town of Redington Beach shall conserve, protect and appropriately manage its natural resources (aquatic, wetland, and terrestrial).

Permitting the more efficient use of land resulting from the adoption of the proposed ordinance represents the appropriate management of the Town's natural resources.

Based on the foregoing analysis, the Planning Board found proposed Ordinance 2018-04 to be consistent with the Town's Comprehensive Plan.

December 27, 2018

ANALYSIS

As recommended for approval by the Planning Board, the draft ordinance presents some minor corrections and clarifications and enacts a new section permitting the Building Official to administratively vary the distance between a pool and the seawall. At the suggestion of the Planning Board, the original draft of the Ordinance was amended to establish a maximum variance that can be administratively granted and to clarify the grounds on which the variance may be granted. Those changes are incorporated into the attached Ordinance.

STAFF RECOMMENDATION

Staff recommends **ADOPTION ON SECOND AND FINAL READING OF THE ATTACHED ORDINANCE SUBJECT TO COMMENTS THAT MAY BE RECEIVED AT THE PUBLIC HEARING.**

DC/RBMcL/m

DEC 14 2017

TOWN OF REDINGTON BEACH, FLORIDA
Board of Adjustment Application

(Please type or print clearly)

Property Owner(s)

Name: ANTHONY ROSS & AMANDA LIDDY
Email: ANTHONYROSS15@OUTLOOK.COM
Address: 16004 5th St. East
City: REDINGTON BEACH
State: FL
Zip: 33708
Phone: 727-403-5955
Fax:
Cellular: 813-220-9436

Applicant

Name: ANTHONY ROSS
Email: ANTHONYROSS15@OUTLOOK.COM
Address: 16004 5th St. E.
City: REDINGTON BEACH
State: FL
Zip: 33708
Phone:
Fax:
Cellular: 813-220-9436

Agent (if applicable)

Name:
Email:
Address:
City:
State:
Zip:
Phone:
Fax:
Cellular:

General Information

Property Location or Address: 16004 5th St. East

Legal Description (attach additional sheets as necessary): REDINGTON BEACH HOMES 6TH ADDITION BLK 2, LOT 31

Tax Parcel Number(s): 04 31 15 73962 002

Zoning District:

Requested Action: [please check all that apply]

- ☑ Setback variance
- ☐ Fence height variance
- ☐ Sidewalk waiver
- ☐ Other
- ☐ Parking variance
- ☐ Dock variance

Describe Request: (attach additional sheets as necessary)

REQUESTING 8' 4" variance to install new pool. Seawall was replaced in November 2017 and included special engineering with 55' span beam to accomodate pool design. PLEASE REFERENCE ENGINEERING DIAGRAMS ATTACHED.

Required LDC Regulation(s): [list all that apply]

SECTION 6-234 (b)

DEC 14 2017

TOWN OF REDINGTON BEACH, FLORIDA
Board of Adjustment Application

1. What special conditions or circumstances exist which are peculiar to the lands, structures or dwellings involved, and which are not applicable to other lands, structures or dwellings in the same district?

I HAD A NEW SEAWALL INSTALLED 11/17 TO ACCOMODATE POOL CLOSER TO SEAWALL. WANTED TO ACCOMODATE 3' 8" WALKWAY BETWEEN POOL AND BLOCK COLUMNS FOR SAFETY REASONS.

2. What strict interpretation of the provisions of the subject ordinance would deprive the Applicant(s) of rights commonly enjoyed by other properties in the same district causing undue hardship on the Applicant?

AMANDA (HOME OWNER) HAS M.S. AND ONE REASON WE WANTED A LARGER POOL WAS TO ACCOMMODATE A SWIM LANE SO SHE COULD EXERCISE OUTSIDE DURING THE WARM/HOT MONTHS

3. What special conditions or circumstances entitles the Applicant to a variance or special exception that are NOT the result of actions of the Applicant?

NEW SEAWALL AND ABOVE MENTIONED PERSONAL HARDSHIP

4. Explain how the granting of the variance or special exception will not confer on the Applicant any special privilege that is denied other lands, structures or dwellings in the same district.

WITH APPROPRIATE ENGINEERING OF THE SEAWALL I BELIEVE THE ORIGINAL INTENT OF SAFETY AND STRUCTURAL INTEGRITY OF THE CODE REMAINS INTACT.

5. Explain how the variance requested is the minimum variance that will make possible the reasonable use of the lands, structures or dwelling, will be in harmony with the general purpose and intent of the zoning ordinances, and will not be injurious to the neighborhood or otherwise detrimental to the public welfare.

NEW SEAWALL WAS ENGINEERED WITH SPAN BEAMS TO ALLOW A POOL NEXT TO SEAWALL. THE LARGER POOL WILL LIKELY INCREASE PROPERTY VALUE WHICH WOULD BE BENEFICIAL TO THE NEIGHBORHOOD.

Note: No nonconforming use of neighboring lands, structures or dwellings in the same district, and no permitted use of lands, structures or dwellings in other districts shall be considered grounds for the issuance of a variance or special exception. Under NO circumstances shall a variance be granted to permit use not generally, or by special exception, permitted in the district involved, or any use expressly or by implication prohibited by the terms of this Ordinance.

TOWN OF REDINGTON BEACH, FLORIDA
Board of Adjustment Application

DEC 14 2017

AFFIDAVIT

I (we), the undersigned, certify ownership of the property within this application, that said ownership has been fully divulged, whether such ownership by contingent or absolute, and that the name of all parties to an existing contract for sale or any options are filed with this application. I (we) certify that _____ is/are duly designated as the agent(s) for the owner, that the agent(s) is (are) authorized to provide subject matter on the application contained herein, whether verbal or written and appear at any public hearing(s) involving this petition. Further, it is understood that this application must be complete and accurate and the appropriate feed paid prior to processing.

Date: 12/14/17 Title Holder: Anthony E. Ross

Date: _____ Title Holder: _____

Date: _____ Title Holder: _____

Date: _____ Title Holder: _____

STATE OF FLORIDA)

COUNTY OF PINELLAS)

The foregoing instrument was acknowledged before me this 1 day of December, A.D., 20 17

By Anthony Ross, who is personally known to me or who has produced _____ as identification and who did (did not) take an oath.

NOTARY PUBLIC

Name: Melissa Clarke

Signature: Missy Clarke

Stamp:

MELISSA CLARKE
Notary Public - State of Florida
Commission # FF 930855
My Comm. Expires Oct 26, 2019
Bonded through National Notary Assn.

PLAN VIEW

NOTE: MANTA RAY ANCHORS SHOWN. DEADMAN MAY TO BE USED AS NECESSARY.

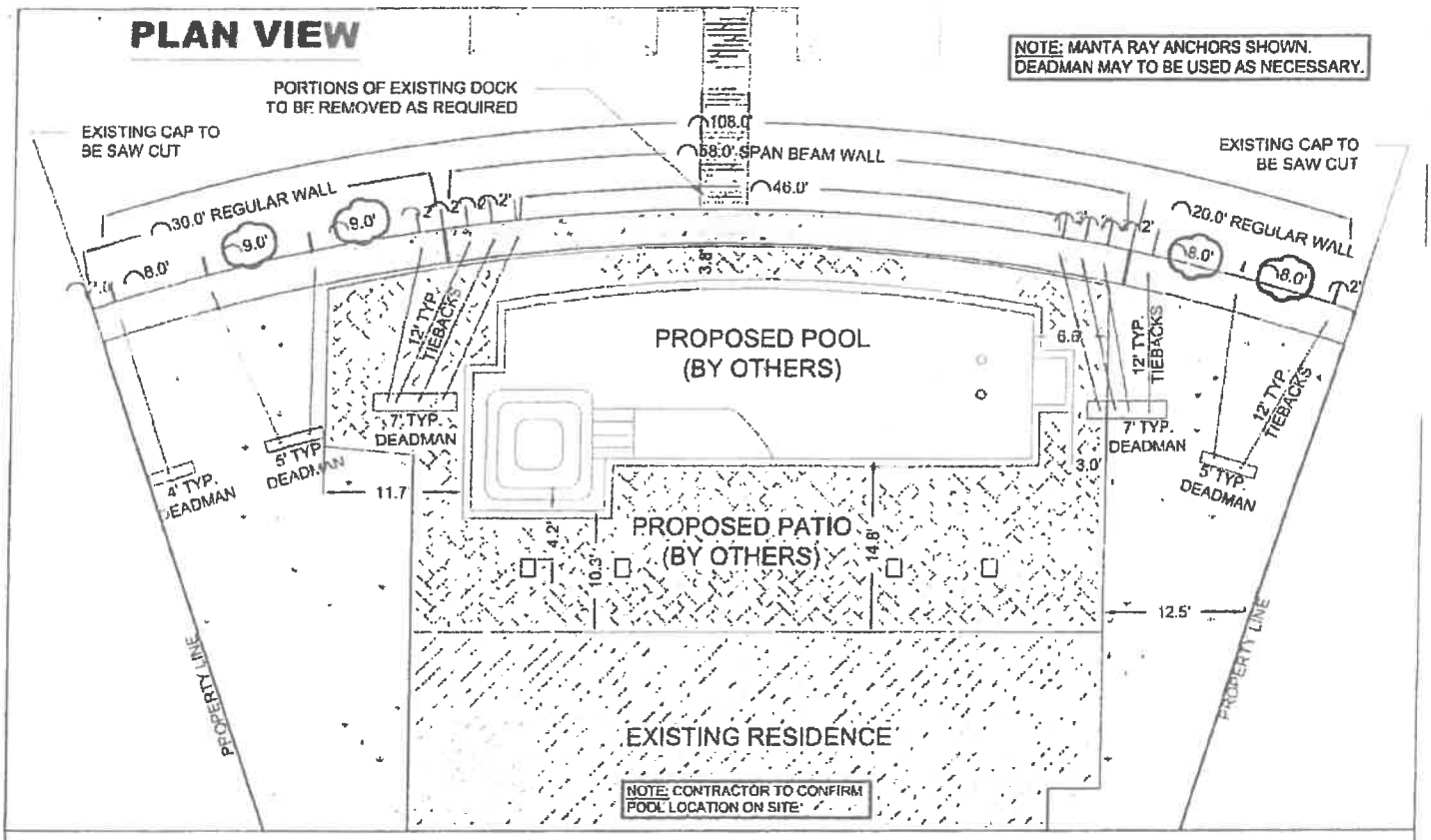

WALL DETAIL (REGULAR WALL)

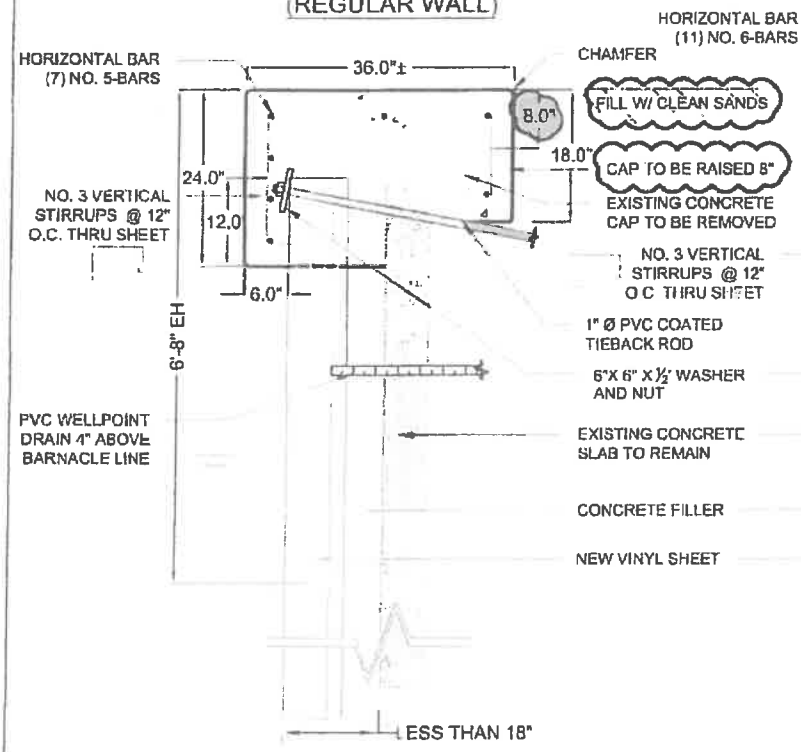

WALL DETAIL (SPAN BEAM WALL)

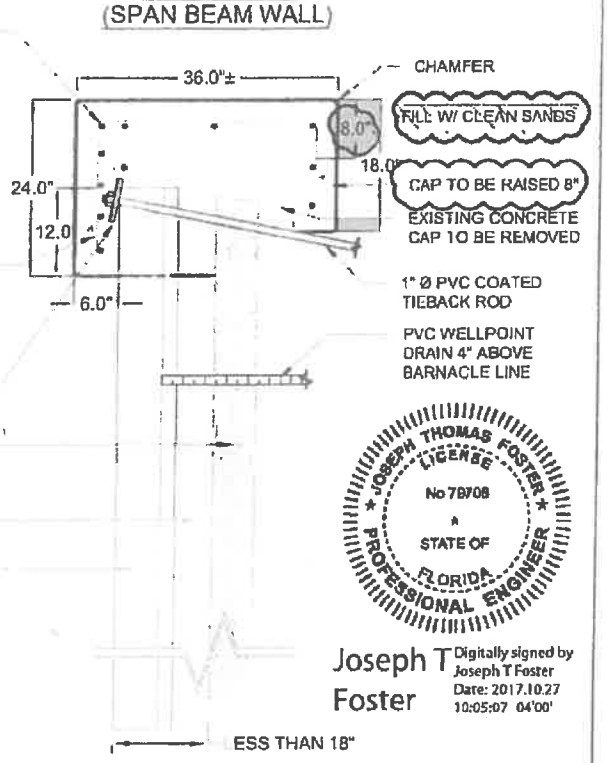

JOSEPH THOMAS FOSTER LICENSE No 79708 STATE OF FLORIDA PROFESSIONAL ENGINEER

Joseph T Foster — Digitally signed by Joseph T Foster Date: 2017.10.27 10:05:07 04'00'

DEC 14 2017

604 5TH STREET E.
REDINGTON BEACH, FL.

FOSTER CONSULTING

FOSTER CONSULTING
FL PROFESSIONAL ENGINEER NO. 79708
DELAWARE LIC. # 18618 — NJ LIC.# 24GE05181200
P: (727) 821-1949
WWW.JFOSTERCONSULTING.COM
P.O. BOX 7370, ST. PETERSBURG, FL 33734

DATE: 7-6-17	FILE NAME: 19917
DRAWN BY: NSN	SHEET: 1 OF 2
CHKD BY: JTF	REV: 8-30-17 10-27-17 10-20-17 10-25-17
SCALE: AS SHOWN	

DEC - 4 2017

SPAN BEAM ANCHOR DETAIL

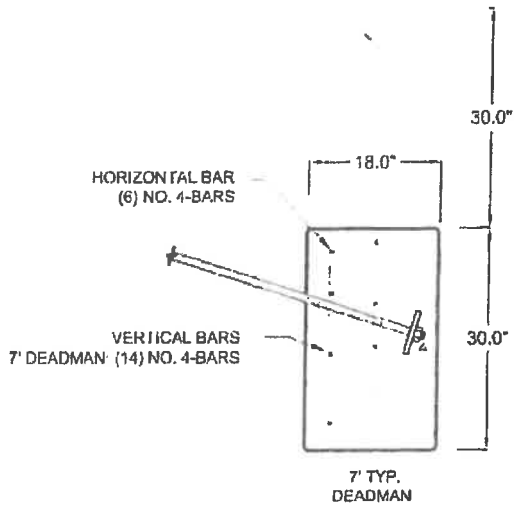

ANCHOR DETAIL

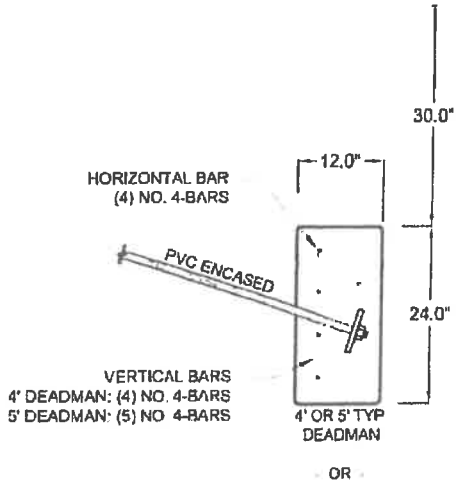

CAP RETURN DETAIL

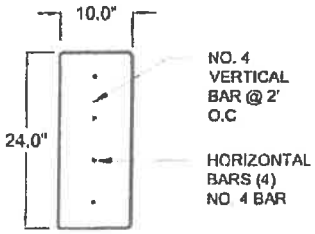

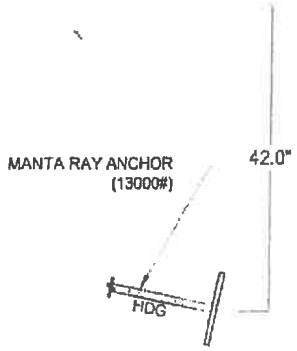

JOSEPH THOMAS FOSTER
LICENSE
No 79708
STATE OF
FLORIDA
PROFESSIONAL ENGINEER

Joseph T Foster Digitally signed by Joseph T Foster Date: 2017.10.27 10:04:39 -04'00'

NOTES:

1. CONCRETE- 4000 PSI (CAP) AND 3000 PSI (FILLER) AT 28 DAYS
2. SHEETS - VINYL SHEET PILE (VANGUARD,ESP 4.1 OR EQUAL) AT MIN 12' IN LENGTH
3. TIEBACK RODS - 1" X 12' LONG PVC ENCASED TIEBACK ROD WITH (2) HDG 6" x 6" x 1/2" WASHERS AND NUTS AT EACH END WITH CONCRETE DEADMAN OR 1" X 12' LONG HDG TIEBACK ROD CONNECTED TO MR-SR MANTA RAY ANCHORS TENSIONED TO 13000#
4. DRAINS- 1.25" DIAM. X 4' LONG SLIT TYPE PVC WELL POINT DRAINS THROUGH BOTH WALLS AT 6' CENTERS 4" ABOVE THE BARNACLE LINE.
5. REBAR- GRADE 60, PLAIN , 3" COVER
6. CAP- RAISE CAP 8"
7. MEETS FBC 2014 - 5TH EDITION

16004 5TH STREET E. REDINGTON BEACH, FL.	FOSTER CONSULTING	FOSTER CONSULTING FL PROFESSIONAL ENGINEER NO. 79708 DELAWARE LIC. # 18618 NJ LIC.# 24GE05181200 P: (727) 821-1949 WWW.JFOSTERCONSULTING.COM P.O. BOX 7370, ST. PETERSBURG, FL 33734	DATE: 7-6-17 DRAWN BY: NSN CHKD BY: JTF SCALE: AS SHOWN	FILE NAME: 19917 SHEET: 2 OF 2 REV: 10-20-17

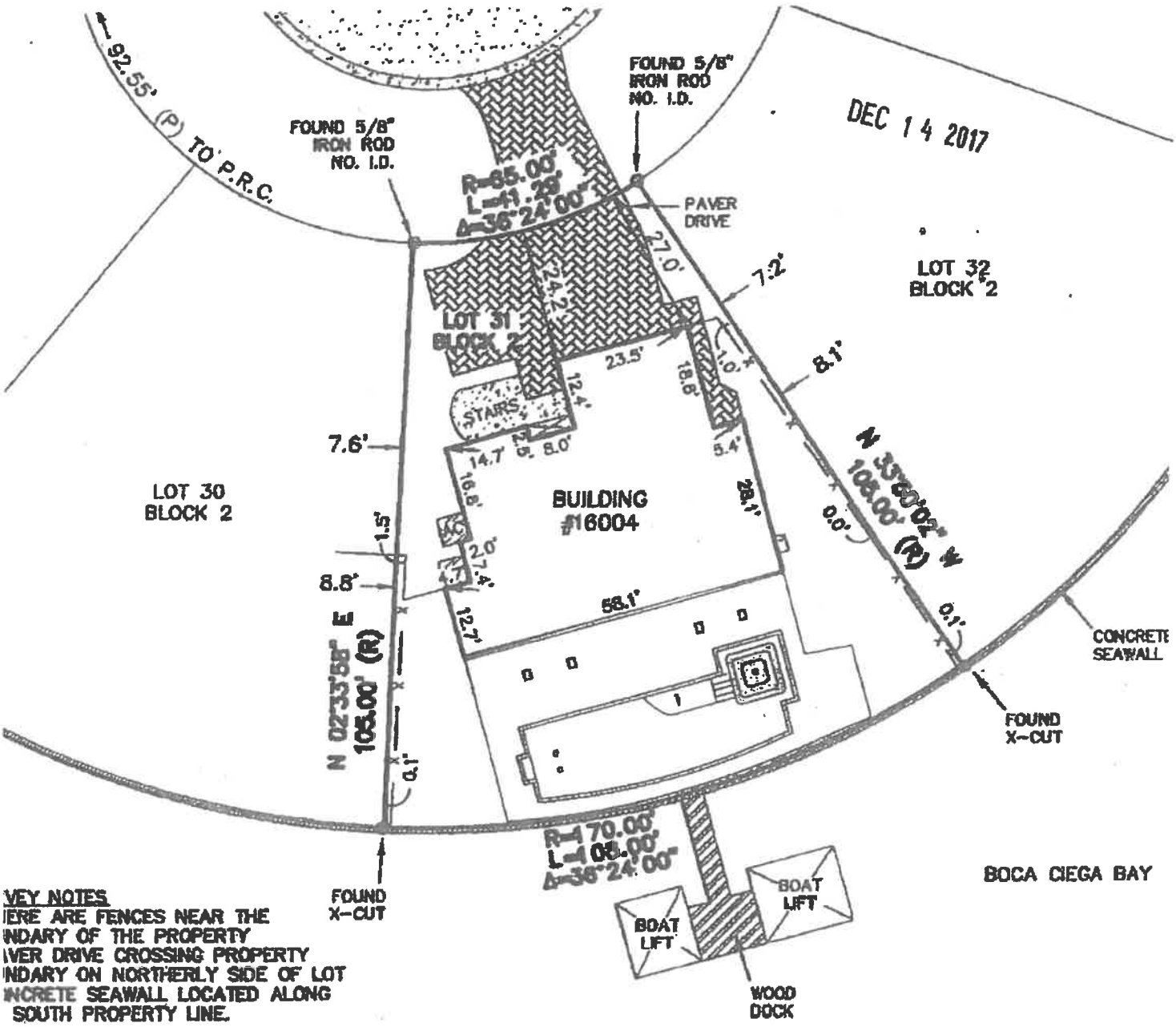

VEY NOTES
IERE ARE FENCES NEAR THE
NDARY OF THE PROPERTY
IVER DRIVE CROSSING PROPERTY
NDARY ON NORTHERLY SIDE OF LOT
NCRETE SEAWALL LOCATED ALONG
SOUTH PROPERTY LINE.

BOUNDARY SURVEY

LB #7893

CLYDE D. McNEAL CERTIFICATE No. 2693 STATE OF FLORIDA PROFESSIONAL SURVEYOR & MAPPER

SURVEYORS CERTIFICATE

I HEREBY CERTIFY THAT THIS BOUNDARY SURVEY IS A TRUE AND CORRECT REPRESENTATION OF A SURVEY PREPARED UNDER MY DIRECTION. NOT VALID WITHOUT AN AUTHENTICATED ELECTRONIC SIGNATURE AND AUTHENTICATED ELECTRONIC SEAL, OR A RAISED EMBOSSED SEAL AND SIGNATURE.

Digitally signed by Clyde McNeal
DN: CN = Clyde McNeal, C = US
Date: 2012.01.24 13:29:53 -05'00'

Clyde McNeal

CLYDE D. McNEAL, PROFESSIONAL SURVEYOR AND MAPPER #2693

TARGET SURVEYING, LLC

SERVING ALL FLORIDA COUNTIES

6250 N. MILITARY TRAIL, SUITE 102
WEST PALM BEACH, FL 33407
PHONE (561) 640-4800
FACSIMILE (561) 640-0576
STATEWIDE PHONE (800) 226-4807
STATEWIDE FACSIMILE (800) 741-0576

Town Hall
105-164th AVENUE
REDINGTON BEACH, FL 33708
PHONE: 727-391-3875
FAX: 727-397-6911
Email address:
info@townofredingtonbeach.com

NOTICE OF PUBLIC HEARING

APPLICATION OF EXCEPTION

Anthony Ross and Amanda Liddy, property located at **16004 5th St. E.**, REDINGTON BEACH HOMES 6TH ADD BLOCK 2 LOT 31, as recorded in plat book 31 page 29 of the Pinellas County Property Appraiser's office, are requesting the Board of Adjustment to grant an exception to install a swimming pool 8' 4" into the rear setback area whereas per Section 6-234(b) of the Town of Redington Beach Code of Ordinances, a swimming pool located on waterfront property must be 12' from the seawall.

You as a property owner are within 150' of the subject property and are invited to register your opinion at a Public Hearing to be held **January 18, 2018** at 7:00 P.M. in the Town Hall Assembly Room located at 105 164th Avenue, Redington Beach, FL 33708 or you may respond by letter to the Deputy Clerk stating your reasons for your opinion. This letter should be mailed or emailed to the Town Hall at the above address. It is imperative that the Board of Adjustment members know the reasons for your approval or disapproval so that they can give your comments the proper consideration.

Any person wishing to appeal any decision of the Board of Adjustment with respect to any matter considered at this meeting will need a record of the proceedings, and for such purposes, may need to ensure that a verbatim record of the proceedings is made, which includes the testimony and evidence upon which an appeal is to be based.

Adriana Nieves
Deputy Town Clerk

Date of Notice: December 18, 2017

Sec. 6-234. - Location.

(a) *Gulf-front property.* A swimming pool may be constructed on any property lying between Gulf Boulevard and the Gulf of Mexico, provided the pool is set back at least 20 feet from the coastal construction line and is at least five feet from the foundation of the residence. Side line restrictions shall apply as provided for in appendix A, section 5, of this Code.

(b) *Waterfront property.* A swimming pool may be constructed in the rear yard of waterfront property, provided the pool is set back at least 12 feet from the seawall and does not interfere with seawall deadmen or tiebacks, and is at least five feet from the foundation of the residence. If the rear set back is less than 18 feet an inspection by the building official during excavation shall be mandatory. Side line restrictions shall apply as provided for in appendix A, section 5 of this Code.

(c) *Nonwaterfront property.* A swimming pool, in-ground or aboveground, may be constructed in rear yards of inside lots, provided the pool is set back at least five feet from the rear lot line and is at least five feet from the foundation of the residence. Side line restrictions shall apply as provided for in appendix A, section 5, of this Code.

(Code 1980, § 5-6(a)—(c); Ord. No. 94-08, § I, 12-5-94; Ord. No. 09-06, § 1, 5-5-09)

Cross reference— Zoning, App. A.

Town of Redington Beach
ORDINANCE NO. 2018 – 04

AN ORDINANCE OF THE TOWN OF REDINGTON BEACH, PINELLAS COUNTY, FLORIDA, AMENDING THE TOWN CODE OF ORDINANCES CHAPTER 6 – BUILDINGS AND BUILDING REGULATIONS, ARTICLE VIII. – SWIMMING POOLS, SECTION 6-234. – LOCATION.; PROVIDING FOR SEVERABILITY AND ESTABLISHING AN EFFECTIVE DATE.

WHEREAS, the Board of Commissioners of the Town of Redington Beach desires to more effectively regulate the construction of swimming pools on Intracoastal frontage properties within the Town, especially as it relates to the construction of swimming pools in relation to seawall construction and maintenance; and

WHEREAS, the Board of Commissioners of the Town of Redington Beach finds that such regulation is in the best interests of the public health, safety and welfare; and

WHEREAS, the Board of Commissioners of the Town of Redington Beach has determined that the amendment of Chapter 6 – Buildings and Building Regulations, Article VIII. – Swimming Pools, Section 6-234. – Location, is necessary to effectively regulate same; and

WHEREAS, the Town's Planning Board, which serves as its Local Planning Agency, has found this Ordinance to be consistent with the Town's Comprehensive Plan and has recommended approval of the amendment to further consistency with the Town's Comprehensive Plan;

NOW, THEREFORE BE IT ORDAINED by the Board of Commissioners of the Town of Redington Beach, Florida, that:

Section 1. The foregoing whereas clauses are incorporated herein by reference and made a part of hereof.

Section 2. This ordinance amends Chapter 6 – Buildings and Building Regulations, Article VIII. – Swimming Pools as follows:

ARTICLE VIII. - SWIMMING POOLS

Sec. 6-234. - Location.

(a) *Gulf-front property.* A swimming pool may be constructed on any property lying between Gulf Boulevard and the Gulf of Mexico, provided the pool is set back at least 20 feet

from the Coastal Construction Control Line as said Line is established by the State of Florida, and is at least five feet from the foundation of the residence. Side lot line restrictions shall apply as provided for in appendix A, section 5, of this Code.

(b) ~~*Waterfront property.*~~ *Intracoastal-frontage property.* A swimming pool may be constructed in the rear yard of ~~waterfront~~ Intracoastal frontage property, provided the pool is set back at least 12 feet from the seawall and does not interfere with seawall deadmen or tiebacks, and is at least five feet from the foundation of the residence. If the rear set back is less than 18 feet, an inspection by the building official during excavation shall be mandatory. Side lot line restrictions shall apply as provided for in appendix A, section 5 of this Code.

(c) *Non-waterfront property.* A swimming pool~~, in-ground or aboveground,~~ may be constructed in rear yards of inside non-Gulf-front and non-Intracoastal frontage lots, provided the pool is set back at least five feet from the rear lot line and is at least five feet from the foundation of the residence. Side lot line restrictions shall apply as provided for in appendix A, section 5, of this Code.

(d) Notwithstanding the setback requirements of §§ 6-234 (a) and (b), when the Engineer of Record certifies to the Building Official that the proposed swimming pool along with all existing or proposed seawalls can be safely engineered so that foundations, deadmen, tiebacks, and all other structural features of both the swimming pool and the seawall meet the requirements of the Florida Building Code as well as sound engineering and construction practices, the Building Official may, if the engineering of the seawall and pool so permit, administratively vary the gulf front setback to no less than twelve (12) feet from the Coastal Construction Control Line and the required setback on Intracoastal-frontage properties to no less than five (5) feet from the center of the seawall cap. The certification required by this paragraph shall be in writing to the Town Building Official on a form to be provided by the Town.

For the purposes of this Section, the "Engineer of Record" is defined in Section 10-10

Section 3. If any section, subsection, sentence, clause, provision or word of this Ordinance is held unconstitutional or otherwise legally invalid, same shall be severable and the remainder of this Ordinance shall not be affected by such invalidity, such that any remainder of the Ordinance shall withstand any severed provision, as the Board of Commissioners would have adopted the Ordinance and its regulatory scheme even absent the invalid part.

Section 4. This Ordinance shall become effective immediately upon final passage and adoption.

PASSED AND ADOPTED by the Board of Commissioners of the Town of Redington Beach, Pinellas County, Florida, on this _____ Day of _____ 201__.

ATTEST:

_____

_____

Missy Clarke, CMC Town Clerk

Nick Simons, Mayor

	Motion	Seconded	Aye	Nay	Absent
Commissioner Kornijtschuk					
Commissioner Dorgan					
Commissioner Steiermann					
Vice Mayor Will					
Mayor Simons					

Meeting Date: January 2, 2019
ADVERTISED PUBLIC HEARING
Agenda Item ____

FLORIDA MUNICIPAL SERVICES
18001 Gulf Blvd.
Redington Shores, FL 33708
(727) 202-6825

December 27, 2018

MEMORANDUM

TO: Honorable Mayor and Members of the Town Board of Commissioners

FROM: Darin Cushing, CBO, CFM, Building Official
R. Bruce McLaughlin, AICP, MCIP, Town Planner

SUBJECT: Right of Way Utilization/Driveway Connection Regulations – Ordinance 2018-05

EXECUTIVE SUMMARY

The current R/W Utilization Ordinance needs enhancement, modernization, clarity and legal enforceability. The Town also lacks any meaningful regulation of driveway connections to Town rights-of-way. Staff recommended rewriting the R/W Utilization Code and adoption of a driveway connection ordinance and the LPA concurred, finding said ordinance to be consistent with the Comprehensive Plan. This Board adopted the Ordinance on first reading on 12/5/19. Staff recommends **ADOPTION ON SECOND AND FINAL READING OF THE ATTACHED ORDINANCE SUBJECT TO COMMENTS THAT MAY BE RECEIVED AT THE PUBLIC HEARING.**

BACKGROUND

Applicant: Town of Redington Beach

Location: Entire Town

THE REQUEST

Staff requested and recommended that the Town's right-of-way utilization regulations now entitled "digging and removal of pavement" be updated and made more enforceable. Also as part of the work on the other ordinances pending before the Town Board, the need for better regulation of driveway connections was identified. Staff's request was presented to the Planning Board sitting as the Local Planning Agency and the LPA, after extensive review of the issue, including at an advertised public hearing, recommended approval of the attached Ordinance.

HISTORY

In the summer of 2017, staff were advised that the Town had no right-of-way utilization or driveway connection regulations. Several interactions with the Town Administration and discussions before the Planning Board did not contradict that advice and, on the suggestion of Staff, supported by the Planning Board, the Town Attorney's office was instructed to begin to prepare an initial right-of-way utilization and driveway connection ordinance.

As that work began, in mid-February, 2018, the Assistant Town Attorney and Staff, independently, determined that the Town does have right-of-way utilization regulations, codified in Chapter 19 of the Town Code.

Chapter 19 seems to have been derived primarily from the 1980 Code, with minor amendments, (related to the role of the Public Works Director), enacted by Ordinance 2014-04. Just based on its format, and without reviewing the underlying ordinances, it appears that the 1980 Code was adopted in a somewhat piecemeal fashion. In any event, the existing Code (Attachment A) requires modernization, enhancement and clarification.

The proposed amendment, Ordinance 2018-05, (Attachment B) reflects extensive effort by the Planning Board, including one advertised public hearing, along with input from Staff and from the Town Attorney's office. The Town Engineer also made suggestions which are incorporated into the attached draft.

Ordinance 2018-05 was adopted on first reading on December 5, 2018 and is now before the Town Board for second and final reading. One substantive change has been made after first reading: the effective date of Ordinance 2018-05 has been changed to make this ordinance effective concurrently with Ordinance 2018-13 so that the "no parking on swales" prohibition remains continuously in effect.

NOTICE

The Town Clerk's office will advise as to the notice given of this proceeding.

AUTHORITY

Pursuant to §§ 4 and 5 of the Town Charter, the Town is governed by the Board of Commissioners which may exercise all powers available to a municipality under the Constitution and laws of the State of Florida. Those powers include preparing, adopting and amending land development regulations, including the regulation of driveways and driveway connections to public rights-of-way. Sections 163.3161 (4) and (6), F.S., incorporate transportation and utilities planning and public and private development into the comprehensive planning process, thereby conferring jurisdiction on the Town Board of Commissioners to regulate activity in the Town's rights-of-way.

COMPREHENSIVE PLAN CONSISTENCY

The proposed ordinance is consistent with the following Goals, Objectives and Policies of the Transportation Element of the Town's Comprehensive Plan:

Goal 1: A safe, convenient, and efficient motorized and non-motorized transportation system shall be available for all residents and visitors to the town.

Objective 1.2
Roadway rights-of-way shall be identified, reserved, or acquired.

Objective 1.4
The town's transportation system shall emphasize safety and aesthetics.

Policy 1.4.4
Cooperate with the County and FDOT to control connections and driveways to Gulf Boulevard (SR 699) through the site plan review process.

Policy 1.4.5
Conduct a cost-benefit analysis for underground utilities. streetscape. and pedestrian safety and traffic calming improvements on a town-wide basis.

The proposed ordinance is also consistent with the following Goals, Objectives and Policies of the Infrastructure Element of the Town's Comprehensive Plan:

Goal 1: The Town shall ensure that needed sanitary sewer, solid waste and potable water services be provided by a safe and efficient system which maintains adequate facilities and provides for orderly growth and expansion.

Goal 2: To endeavor to provide an efficient drainage system which protects human life, minimizes property damage, and improves stormwater quality and on-site retention.

Objective 2.1
The Town shall seek to improve the stormwater drainage system located within its municipal boundaries.

Policy 2.1.1
Ensure that surface cover vegetation loss during construction is minimized or replaced to reduce erosion and flooding.

Policy 2.1.2
Ensure that the developer or owner of any new development or redevelopment site is responsible for the on-site management of stormwater runoff so that post-development runoff rates, volumes. and pollutant loads do not exceed pre-development conditions.

Policy 2.1.3
Future drainage outfalls associated with either new development or redevelopment. shall be designed to prevent the direct discharge of runoff into Boca Ciega Bay or the Gulf of Mexico.

Policy 2.1.4
Implement the town's Watershed Management Plan in conjunction with the Southwest Florida Water Management District to address existing drainage and flooding conditions.

Objective 2.2
All development within the Town of Redington Beach shall meet the adopted level-or-service standard for stormwater drainage.

Policy 2.2.1
Al development activity shall adhere to the level-of-service standard for drainage requirements of the 25 year, 24 hour rainfall storm design standard.

Policy 2.2.2
New development, redevelopment, and rehabilitation shall meet and maintain the standards established by the Florida Department of Environmental Regulation for the Outstanding Florida Waters and Aquatic Preserve designations of Boca Ciega Bay that require an additional fifty percent storage and treatment on site.

Policy 2.2.3
The following management techniques shall be used to reduce stormwater runoff.

1. Expansion and regular maintenance of retention swales adjacent to town roadways;
2. Use of front, rear and side lot line swales for new construction or redevelopment;
3. Use of erosion and runoff control devices during construction; and

Policy 2.2.4
The land development regulations shall continue to enforce provisions which, at a minimum, protect natural drainage features found within the Town as follows:

1. All applications for development approval within those areas identified as coastal high hazard area shall undergo site plan review;
2. The flood-carrying and flood storage capacity of the 100-year floodplain shall be maintained;

...

4. The prevention of erosion, retardation of runoff and protection of natural functions and values of the floodplain shall be considered while promoting public usage; and
5. The Town shall require development or redevelopment proposals to be consistent with the performance standards regulating development within the designated floodplain.

Accordingly, proposed Ordinance 2018-05 is clearly consistent with numerous Comprehensive

Plan policies found in the Transportation and Infrastructure Elements of the Town's Comprehensive Plan.

ANALYSIS

In the discussions to date of a Right-of-Way Utilization and Driveway Connection Ordinance a number of issues have already been identified, as follows:

Issues

Affected Parties

Beside the Town, the following entities will be affected by the Ordinance:

- Pinellas County Utilities
- Clearwater Gas
- Duke, Frontier and Spectrum
- Private contractors or owners doing construction work in the Town's rights-of-way, including driveway connections.

Careful consideration was given to whether there should be a single set of regulations applicable to all four types of right-of-way users or whether there should be different rules for the public utility, the proprietary utility, the for-profit utilities and private parties. Matters considered were the frequency of right-of-way utilization, the cost of doing business, and the difficulty of enforcing cures for problematic work.

The Planning Board opted to recommend a single set of regulations applicable to all four types of right-of-way users. The attached draft of the Ordinance reflects this recommendation.

Other Local Governments

As set out on Attachment C, most local governments in Pinellas County have right-of-way utilization ordinances and two-thirds have driveway connection ordinances. Enhancing, modernizing and clarifying the Town's Right-of-Way Utilization Ordinance and adding a

driveway connection ordinance will align the Town with most of the County's other local governments.

Bond Requirement

This will be one of the most difficult decisions to make because of the many facets of the issue. About two-thirds of the County's local governments require some sort of bond, some in the form of the registration of the private utilities and a bonding provision related to such registration.

A $2,000 bond from a small contractor doing a single job may be cost-prohibitive, but that may be the type of right-of-way user from whom a bond is most necessary. On the other hand, a $20,000 annual bond from a for-profit utility should be financially feasible but hopefully unnecessary because of the ongoing relationship between the Town and the utility. The Planning Board recommended that a bond be required. Attachment C includes the bond requirement provisions from those local governments that require some sort of bond for work in a right-of-way.

Franchise Requirements

Attachment D is Appendix B to the Town Code, the cable television and electric franchises for the Town (for some reason, no telephone franchise is included in the appendices to the Code).

As the Right-of-Way Utilization Ordinance is more fully developed, it will have to be integrated with the existing franchise agreements.

Alternate Administration

Under the original draft of the Ordinance, the bulk of the responsibility for the administration of the Ordinance rests with the Building Official, sometimes in consultation with the Town Clark and a representative of the Public Works Department. The original draft of the ordinance assigned that role to the Public Works Director. However, by Ordinance 2014-04, the Town apparently abolished the position of Public Works Director and changed references from "director" to "department."

However, making a "department" responsible for specific tasks is potentially problematic. The Town Commission does assign oversight responsibilities for various functions of the Town, such as Public Works, to specific Commissioners. The Ordinance puts the Commissioner responsible for public works issues in the implementation role for the Public Works Department.

Ordinance Overview

Attachment E shows where the provisions of the current code (Attachment A) can be found in the revised Ordinance (Attachment B). Following is a brief overview of the new draft.

CHAPTER 19 – RIGHT-OF-WAY UTILIZATION

Definitions, § 19-1

Some terms in the current ordinance are defined in the body of each section. Other terms in the existing ordinance and some terms in the new ordinance should be defined. A new definitions section, (19-1) is included. The word "person" is defined to include all right-of-way users so that the body of the Ordinance does not have to repeat the types of affected users in each operative provision.

Definitions related to changes in the first part of the Code and related to the swales have been added.

Obstructions, § 19-2

This section basically restates and clarifies the existing code. A prohibition against tracking mud etc., onto a right-of-way is included. An enforcement provision has been added.

Right of Way Utilization, § 19-3

This section:

- Requires compliance with the Code;

- Requires permits and sets out the mechanism for obtaining permits for any right-of-way utilization;
- Sets out the requirements for a permit application;
- Requires plans and specifications to be submitted as part of a permit application; [1]
- Requires notification as part of the permit process; and
- Details what the permit is required to state.

Emergency Exception, § 19-4

This section sets out an exception for emergency work, but still requires the approval of the Building Official or of an agent of the Public Works Department for emergency work, and requires an "after-the-fact" permit.

Construction Standards, § 19-5

This section:

- Sets out in detail the construction standards for right-of-way utilization;
- Generally requires the "jack and bore" method of construction;
- But provides for alternative methods such as the *flowmole* system;
- Requires compliance with relevant technical standards;
- Restates the existing code's requirements for the rehabilitation of the work area;
- Requires keeping workers and materials out of the right-of-way unless they are involved in the immediate ongoing construction process;
- Requires traffic maintenance; and
- Requires inspections of the work.

Remedial Actions, § 19-6

This section sets out the remedial courses of action available to the Town in the event that the work is not completed according to code and the approved plans, or if Town property is damaged in the course of the construction. It includes the "notice to cure" from the current code, invocation of the general penalty provisions of the overall code, and a claim against the bond.

---

[1] Technical specifications to guide the design are being adopted by resolution.

Bond Required, § 19-7

This section, based largely on a recent Pinellas Park Ordinance, requires a bond to be posted before any work is done in a Town right-of-way. As noted above, this issue will require extensive and thoughtful discussion. The Board members may wish to review the bond requirements of the other local governments in Pinellas County for additional insight into this issue.

A provision is made for adjusting the bond amount at the public hearing on the proposed right-of-way utilization.

Fee, § 19-8

This section allows the Town to collect a fee for approving and inspecting right-of-way utilization work. The fee is to be set by resolution of the Town Board and allows an additional fee when a second or subsequent reinspection is required.

Swales, § 19-9.1 Construction

This section requires swales in areas presently served by swales, with the swale design to be based on the drainage plan. No new structures or expansion of existing structures is permitted until the drainage plan, including plans for the swales, is approved.

Technical specifications, including specifications for geometry, flows, stability and inter-connections will be adopted by Resolution, which Resolution will be presented to the Town Board for adoption prior to the effective date of this Ordinance. No certificate of occupancy or certificate of completion will be issued until it is demonstrated that the swale on the property has been constructed in accordance with the approved plans and with the technical specifications for swales.

Swales, § 19-9.2 Maintenance

This section is essentially a restatement and enhancement of the current Code. Note that the second paragraph of the current code is to be moved to Chapter 21 of the Town Code. The provision establishing responsibility for swale maintenance has been clarified.

CHAPTER 19.5 - DRIVEWAY CONNECTIONS

This new Chapter provides the Town with its first regulations related to the connection of driveways to Town rights-of-way. To date, effective and functioning driveway connections can only be compelled through enforcement of site and drainage plans. This Chapter establishes rules for the establishment of new or replacement driveways.

Definitions, § 19.5-1

This section defines the word "driveway" and other terms whose definition is necessary to the effective administration of this Chapter.

Permit Required, § 19.5-2

This section prohibits making a driveway connection to a Town right-of-way without a permit approved by the Building Official.

Construction Standards, § 19.5-3

This section sets constriction standards for driveways including the preparation of a driveway connection permit application plan, driveway widths, and driveway materials, (including detailed requirements for the use of pavers). It also requires compliance with technical specifications to be adopted by Resolution, which specifications shall include provisions for drainage and stormwater facilities, elevation requirements and details about construction materials.

This section contains two significant new provisions. First, it prohibits corner lots with frontage on Gulf Boulevard from constructing a driveway on Gulf Boulevard. Second, it defines "unified control" of multiple lots and then prohibits lots in "unified control" from having more than one driveway to any public right-of-way.

Driveway Maintenance, § 19.5-4

The ordinance provides minimum maintenance standards for driveways, particularly that portion of a driveway on a public right-of-way.

Driveway Relocation, § 19.5-5

The ordinance provides mechanisms for relocating driveways and gives priority, first to the Town and then to the County, with respect to relocating Town or County Facilities.

Indemnification, § 19.5-6

The ordinance requires a property owner, in the construction and maintenance of a driveway, to indemnify the Town and the public at large with respect to and injury that may result from the driveway construction or maintenance.

RECOMMENDATION

Staff recommends **ADOPTION ON SECOND AND FINAL READING OF THE ATTACHED ORDINANCE SUBJECT TO COMMENTS THAT MAY BE RECEIVED AT THE PUBLIC HEARING.**

DC/RBMcL/m

ATTACHMENT A
CURRENT CODE

Chapter 19 - STREETS, SIDEWALKS AND OTHER PUBLIC WAYS[1]

Footnotes:

--- (1) ---

Cross reference— Code enforcement, § 2-46 et seq.; level of service required for certificate of concurrency, § 7-3.

Sec. 19-1. - Obstructions.

No person shall place any thing or object on or do any act in or upon any street, avenue, alley, way, parkway, park, park turnaround, causeway, beach access easement, ditch, drain or gutter within the town which shall obstruct or tend to obstruct such street, avenue, alley, way, parkway, park, park turnaround, causeway, beach access easement, ditch, drain or gutter, or the proper use thereof. However, this section shall not apply to material placed for a reasonable time on such street, avenue, alley, way or parkway, park, park turnaround, causeway or beach access easement in the course of alteration or construction of any building, when such materials are placed there by a person having a duly authorized building permit issued by the town under the provisions of this Code and when such objects or materials are reasonably illuminated during hours of darkness; nor shall this section be construed to prevent the parking of automobiles on any street or avenue in the usual and otherwise lawful manner.

(Code 1980, § 16-2)

State Law reference— Similar provisions, F.S. § 861.01 et seq.

Sec. 19-2. - Digging and removal of pavement.

(a) It shall be unlawful for any person, including but not restricted to public utilities, agencies of the state and county, or private entities contracting with the town, to dig upon and remove any part or portion of the paved area of any of the streets and public roadways within the corporate limits of the town, including the digging and removal of paved roadways for installing, repairing or maintaining utility lines, pipes, cables and other conduits, or for any purposes, without complying with this section.

(b) The board of commissioners may require that the applicant for a digging permit submit a written plan, to be reviewed by the public works department or a third party or agency as directed by the town commission, which would include maps of the expected location and design of wire plant, wireless facilities, conduit and other related equipment and facilities of a public entity or agency which describes the new construction and replacement construction intended to be accomplished on any part or portion of the paved are of any of the streets and public roadways. A major project will be deemed major maintenance if the project requires excavation of any portion of a paved area greater than 200 square feet, and requires approval of the board of commissioners prior to commencement.

(c) Where the maintenance project require the digging of 200 square feet or less of pavement, the board of commissioners requires jack and bore techniques unless, in a special hearing held for this purpose, the applicant for digging permit proves to the satisfaction of the board of commissioners that to do so in a particular permit would be clearly impractical and unreasonable. The guidelines at this hearing shall be:

(1) Extraordinary and unreasonable expense.

(2) Complexity of utilities in the area to be cut or bored with potential interruption of service unless uncovered.

(d) Except as provided in subsection (c) of this section:

(1) Pipelines or conduits under any town roadway shall be installed in a casing to be bored and jacked under the pavement. The casing and jacking procedures shall conform to the requirement of the Utility Accommodation Guide of the state department of transportation and any supplements thereto unless otherwise approved by the town clerk or his/her designee. All work and materials shall be subject to inspection by the public works director. The town's property and surface conditions shall be restored to their original condition.

(2) The contractor shall maintain traffic on the roadway and shall keep all workers and equipment clear of the pavement during the work. All safety regulations of the department of transportation shall be complied with.

(3) The top of the casing shall maintain a minimum 30-inches clearance under the roadway surface unless otherwise approved by the public works department.

(e) When it shall be made to appear to the board of commissioners that the digging and removal of pavement is absolutely necessary, and there is no other practical or reasonable means available in connection with the installation, repairing or maintaining of utility lines, pipes, cables and other conduits within the town or other necessary work, the board of commissioners is empowered to approve the manner and mode of such work and allow such work to be done, and such approval shall be provided in writing and signed by the approving board of commissioners.

(f) Should the digging and removal of pavement be absolutely necessary in an emergency situation, the person, public utility, agency or private entity may dig upon or remove any part or portion of the paved area upon approval of the public works department. Emergency means a condition that poses a clear and immediate danger to the life, health and safety of any natural person or of a significant loss of property, or an out-of-service condition or an imminent threat to the continued provision of a communications service.

(g) Any person removing any part or portion of the pavement, either with or without the permission of the board of commissioners, shall forthwith, or as soon as practical, replace or repair such pavement to its previous exiting condition in accordance with such standards as may be prescribed by the board of commissioners. Each person shall be responsible for the cost of repairing any facilities or areas of pavement which the person, entity or agency may damage.

(h) Should a person, public entity, agency or private entity fail to cure or repair the part or portion of the paved area to its previous existing condition within 30 days after the town has provided such notice, or within such longer length of time specified in the notice to cure, then the town may exercise any remedies or rights the town may have at law or in equity arising from such actions.

(i) The town shall give written notice to cure to the person, public entity, agency or private entity if the town determines that the person or entity has committed one or more of the following:

(1) The elevation of the part or portion of paved are affected by digging or removal is higher or lower than it was prior to any action taken by the person, agency or entity;

(2) The compaction in the event asphalt must be cut and or any road base is disturbed to make the necessary repair or repairs, proper compaction will be required so that the same elevations of the area or areas remain the same as they were prior to the necessary repairs that were made.

(3) In appropriate materials and standards have been used in bringing the paved area to its prior existing condition.

(j) The notice to cure shall include a statement of facts constitution a violation of this section. The notice shall include a statement that a failure to cure within 30 days after giving such notice, within such longer period of time which the town determines to be the minimum reasonable length of time to restore the part or portion of paved area/pavement to its previous existing condition, shall constitute

grounds for the town to exercise any remedies or rights that the town may have at law or in equity arising from such default.

(Code 1980, § 16-3; Ord. No. 11-01, 2-1-11; Ord. No. 2014-04, § 5, 11-18-14)

Sec. 19-3. - Reserved.

Sec. 19-4. - Use of swale areas.

The swale area immediately adjacent to the paved road surface extending to the right-of-way line is intended for drainage by percolation of the water through the natural soil and therefore must always remain a grassy area. The swale shall not be filled in or altered in any manner that will disturb its slope or impede the flow of water.

No person shall stop, stand, drive or park a vehicle on or across any grass portion of any swale or swale area. On all roads that have swales, parking shall be allowed only on the driveway apron, on the roadway or on private property. Parking on the roadway shall be allowed on the even-numbered address side only.

(Ord. No. 92-02, § I, 3-3-92)

ATTACHMENT B
PROPOSED CODE

Town of Redington Beach
ORDINANCE 2018-05

AN ORDINANCE OF THE TOWN OF REDINGTON BEACH, PINELLAS COUNTY, FLORIDA, AMENDING THE TOWN CODE OF ORDINANCES, REPEALING CHAPTER 19 – STREETS, SIDEWALKS AND OTHER PUBLIC WAYS; ADOPTING A NEW CHAPTER 19 – STREETS, SIDEWALKS AND OTHER PUBLIC WAYS; CREATING CHAPTER 19.5 – DRIVEWAY CONNECTIONS; PROVIDING FOR REPEAL AND RENUMBERING; PROVIDING FOR SEVERABILITY AND ESTABLISHING AN EFFECTIVE DATE.

WHEREAS, the Board of Commissioners of the Town of Redington Beach desires to more effectively regulate its streets, sidewalks, public rights-of-way, as well as driveway connections thereto; and

WHEREAS, the Board of Commissioners of the Town of Redington Beach finds that such regulation is in the best interests of the public health, safety and welfare; and

WHEREAS, the Board of Commissioners of the Town of Redington Beach has determined that the amendment of Chapter 19 – Streets, Sidewalks and Other Public Ways, as well as the enactment of Chapter 19.5 – Driveway Connections is necessary to effectively regulate same; and

WHEREAS, the Town's Planning Board, which serves as its Local Planning Agency, has found this Ordinance to be consistent with the Town's Comprehensive Plan and has recommended approval of the amendment to further consistency with the Town's Comprehensive Plan;

NOW, THEREFORE BE IT ORDAINED by the Board of Commissioners of the Town of Redington Beach, Florida, that:

Section 1. The foregoing whereas clauses are incorporated herein by reference and made a part of hereof.

Section 2. This ordinance specifically repeals and replaces the entirety of Chapter 19 – Streets, Sidewalks and Other Public Ways, with the complete text set forth in this Section:

Chapter 19 – STREETS, SIDEWALKS AND OTHER PUBLIC WAYS

Sec. 19-1. - Definitions.

The following words, terms and phrases, when used in this Chapter, shall have the meanings ascribed to them in this Chapter, except where the context clearly indicates a different meaning:

(a) For the purposes of this Chapter, the "*Engineer of Record*" is defined in Section 10-10 of the Town Code.

(b) *Emergency* means a condition that poses a clear and immediate danger to the life, health, or safety of any natural person, or of a significant loss of property, or an out-of-service condition or an imminent threat to the continued provision of the utility or feature requiring emergency repairs or maintenance.

(c) *Horizontal directional drilling (HDD)* is a basic trenchless technology that involves drilling into the earth to create a horizontal bore under the surface along a planned pathway through which pipes and conduits may pass. Once the HDD creates a bore of suitable size - which may require one or multiple passes by the drilling apparatus - the conduit or pipe is pulled into the bore and connections are made to the appropriate utilities.

(d) *Jack and Bore* means a method for installing a product, (casing), that may serve as a direct conduit for liquids or gases, or as a duct for carrier products, (pipe, cable, or wire line). It is a multi-stage process consisting of constructing a temporary horizontal jacking platform and a starting alignment track in an entrance pit at a desired elevation. The product is then jacked by manual control along the starting alignment track with simultaneous excavation of the soil being accomplished by a rotating cutting head in the leading edge of the product's annular space. The ground up soil (spoil) is transported back to the entrance pit by helical wound auger flights rotating inside the product. Jack and bore typically provides limited tracking and steering as well as limited support to the excavation face.

(e) *Major Project* means any project that disturbs or utilizes more than two-hundred square feet of park, public utility land, or right-of-way.

(f) *Minor Project* means any project that disturbs or utilizes two-hundred square feet or less of park, public utility land, or right-of-way.

(g) *Obstruct* means the placement, whether temporary or permanent, of anything in such a place and manner as to impede or block the customary use of the physical area being obstructed.

(h) *Open Cut* means excavating down to and exposing the existing or proposed wire or pipe so that it can be placed, repaired, or replaced and then backfilled with the excavated material.

(I) *Park* includes land that is publicly owned or controlled for the purpose of providing, recreation, beach access, or open space for public use.

(j) *Person* includes public utilities, private utilities, agencies of the State of Florida, agencies of Pinellas County, property owners, property occupants, and private entities doing work in the Town.

(k) *Public Utility Land* includes all ditches, drains, and gutters in the Town.

(l) *Public Works Commissioner* means the member of the Town Board of Commissioners designated from time to time by the Board to be responsible for public works issues.

(m) *Right-of-Way* includes alleys, avenues, boulevards, causeways, lanes, parkways, roads, streets, and ways, and all other public highways in the Town, and shall include the entire width of the right-of-way thereof.

(n) *Right-of-Way Utilization* means the performance of any work or the permanent or semi-permanent placement of any item in any right-of-way in the Town. Without limiting the generality of the foregoing, "Right-of-Way Utilization" further means any activity or installation performed by any entity other than the Town within the boundaries of any right-of-way, including, but not limited to, curb cuts; driveways; swale management and maintenance; excavation activities; installation of pavers, poles, conduits, wires, cables, electrical conductors, fiber optics, digital technology fixtures, manholes, sewer lines, water lines, fencing, signage and sidewalks; structures or other improvements or fixtures; and landscaping activities.

(o) *Sight Triangle* means an area of unobstructed vision at street intersections between three and eight feet above the gutter line and within a triangular area at the street corner, which area is bounded by the lesser of: (1) The street property lines of the corner lot and a line connecting points 25 feet distant from the intersection of the property lines of such lot; or (2) The curb lines of an intersection and a line connecting points 35 feet distant from the corner of the intersection, such corner determined by projecting the curb lines out to a specific point.

(p) *Stabilized Entrance:* means an area from the existing edge of pavement onto a construction site, which area is comprised of Number 57 rock, poured to a depth of not less than 3 (three) inches with a width of not less than 12 (twelve) feet and a length of not less than 15 (fifteen) feet from the edge of pavement and with a flared edge of not less than 5' x 5' at the edge of pavement.

(q) *Swale* means a low-lying grassed area with gradual slopes which transports stormwater, either on-site or off-site. It is immediately adjacent to the paved road surface extending to the right-of-way line is intended for the conveyance and percolation of stormwater through the natural soil.

(r) *State Right-of-Way* means the entire Gulf Boulevard (State Road 699) right-of-way within the Town.

(s) *Town Right-of-Way* means all rights-of-way in the Town other than the State Right-of-Way.

Sec. 19-2. – Obstructions and tracking onto rights-of-way prohibited.

(a) Except as set forth herein, no person shall place any thing or object on, or do any act in or upon, park, public utility land, or right-of-way which shall obstruct or tend to obstruct such park, public utility land, or right-of-way.

(b) This section shall not apply to material placed for a reasonable time on such park, public utility land, or right-of-way in the course of alteration or construction of any building, when such materials are placed there by a person having a duly authorized building permit issued by the Town under the provisions of this Code, subject to the following conditions:

(1) Such objects or materials shall be reasonably illuminated during hours of darkness;

(2) The plans submitted for the building permit shall specify the proposed park, public utility land, or right-of-way utilization, including all safety precautions related thereto, and said park, public utility land, or right-of-way utilization shall be specifically approved by the Building Official; and

(3) The Building Official may impose reasonable conditions on the approval of the park, public utility land, or right-of-way utilization/obstruction to ensure that said utilization does not create a safety hazard.

(c) This section shall not be construed to prevent the parking of automobiles on any street, avenue or other public right-of-way in the usual and otherwise lawful manner.

(d) No person shall track dirt, mud, grass, ground cover, sediment, or any other matter from a construction site onto a right-of-way.

(e) Unless not required by existing ground conditions, No vehicle shall enter any right-of-way from a construction site without having first stopped on the stabilized entrance and having its tires washed so that no dirt, mud, grass, ground cover, sediment, or any other matter from a construction site is tracked onto the right-of-way.

(f) If, notwithstanding the requirements of this Section, dirt, mud, grass, ground cover, sediment, or any other matter from a construction site is tracked by a vehicle onto a right-of-way, the driver of said vehicle shall stop his vehicle no further than 150 feet from the stabilized entrance and remove the dirt, mud, grass, ground cover, sediment, or any other matter from the

construction site from the right-of-way before proceeding any further.

(g) The general contractor or the person or entity to whom the permit for the construction site is issued shall be responsible for compelling compliance with this section and for undertaking any necessary remedial action.

Sec. 19-3. – Right-of-way utilization.

(a) No person shall work on or in, utilize, or alter, including by digging, any part of any right-of-way in the Town without fully complying with this Chapter. Work encompassed by this Chapter includes removing, installing, repairing, or maintaining utility lines, pipes, cables, and other conduits, and any and all other activities undertaken in a right-of-way.

(b) No person shall work on or in, utilize or alter, including by digging, any part of any right-of-way in the Town without first obtaining a Right-of-Way Utilization Permit for said work, utilization, or alteration.

(1) In the case of work, utilization, or alteration in the State Right-of-Way, the required permit shall be obtained from the Florida Department of Transportation in accordance with the laws, regulations, and rules of the State.

(2) In the case of work, utilization, or alteration in a Town Right-of-Way which constitutes a "minor project," the permit shall be issued by the Building Official after consultation with the Public Works Commissioner and the Town Clerk. The Building Official may impose reasonable conditions on the Right-of-Way Utilization Permit as are necessary to protect the public health, safety, and welfare.

(3) In the case of work, utilization, or alteration in a Town Right-of-Way which constitutes a "major project," the permit application shall be approved by the Board of Commissioners after a public hearing at which the Board receives the comments and recommendations of the Public Works Commissioner, the Town Clerk, and the Building Official. The Board of Commissioners may impose reasonable conditions on the Right-of-Way Utilization Permit as are necessary to protect the public health, safety, and welfare.

(c) The applicant for a Right-of-Way Utilization Permit from the Town shall provide a written plan, including maps, drawings and, where appropriate, engineered plans and specifications for the work, which plans and specification shall be certified by the engineer of record as complying with all applicable laws, codes, and regulations. The required plans shall include:

(1) The design and placement of wire plant;

(2) The design and placement of wireless facilities;

(3) The design and placement of conduit;

(4) The design and placement of all piping, including potable water, reclaimed water, sanitary sewer, and stormwater facilities;

(5) A plan for the maintenance or improvement of the existing drainage in and around the work area;

(6) For work within twenty-five feet of an intersection, a demonstration that the construction will not adversely affect visibility through the sight triangle; and

(7) An estimate of the cost of the work.

(d) No person shall commence any activity on any right-of-way in the Town without, no less than five days prior to said commencement, providing written notice of said activity to:

(1) The agency providing police protection to the Town;

(2) The agency providing fire protection and fire suppression services to the Town;

(3) The agency providing emergency medical services to the Town;

(4) Pinellas County Utilities;

(5) The electrical utility serving the Town;

(6) The telephone utility serving the Town;

(7) The utility providing natural gas service to the Town; and

(8) The cable television utility serving the Town.

(e) Applications for Right-of-Way Utilization Permits shall be made on a form prepared by the Town.

(f) The Right-of-Way Utilization Permit shall:

(1) Incorporate the application form and supporting materials, as appropriate;

(2) Set forth the pre-construction, construction, and post-construction events at which inspections are required;

(3) Establish a final date for the completion of the work being performed pursuant to the Permit, allowing for modification of the final date in the event that there are unforeseeable delays caused by weather or by other events;

(4) Impose such terms and conditions on the Right-of-Way Utilization Permit as are deemed reasonable and appropriate by the Building Official in consultation with the Public Works Commissioner and the Town Clerk; and

(5) Require when, in the opinion of the Building Official, the nature and location of the construction so requires, the use of flaggers as set forth in the Right-of-Way Utilization Permit.

(g) Pre-construction, construction, and post-construction inspections of the Right-of-Way Utilization work shall be made at the times established by the Building Official on the permit. It shall be the responsibility of the permit holder to call for said inspections and to coordinate said inspections with the Town Building Department.

Sec. 19-4. – Exception for emergencies.

(a) Should any work in a park, public utility area, or right-of-way be absolutely necessary in an emergency as defined in this Chapter, the person undertaking such work may do so upon approval of the Public Works Commissioner or of the Building Official. No such work shall be undertaken until the notices required by section 19-3 (d) are provided verbally to the agencies providing law enforcement, fire protection and suppression, and emergency medical services to the Town.

(b) In the event that such emergency work is undertaken, an "after the fact" permit, in compliance with section 19-3, shall be obtained by the person undertaking said work not later than two business days after the commencement of the work.

Sec. 19-5. – Construction methods.

(a) All work done on a major project shall be done using the "jack and bore" method, However, when certified by the engineer of record as appropriate and the equivalent to, or an improvement on, the appropriateness and effectiveness of the jack and bore method, alternative methods such as horizontal directional drilling using the flowmole technique may be used.

In the public hearing held pursuant to section 19.3 (b)(3), the applicant for a Right-of-Way Utilization Permit must prove to the satisfaction of the Board of Commissioners that cutting and filling within the right-of-way is absolutely necessary, and there is no other practical or reasonable means available in connection with the installation, repairing, or maintaining of utility lines, pipes, cables, and other conduits at the subject location for the subject project. In such a case, the Board of Commissioners is empowered to approve another manner and mode of such work and allow such work to be done. The guidelines for such an approval are:

(1) That the jack and bore method would result in extraordinary and unreasonable expenses; or

(2) The complexity of utilities in the area to be cut or bored with potential interruption of service is such that an open cut method is necessitated.

(b) Construction Standards.

(1) All work shall be done in compliance with the Florida Department of Transportation Manual of Uniform Minimum Standards for Design, Construction and Maintenance for Streets and Highways, Roadway and Traffic Design;

(2) All work, materials, and equipment shall be subject to inspection and approval by the Building Official or the Public Works Commissioner;

(3) Pipelines or conduits under any right-of-way shall be installed in a casing to be bored and jacked under the pavement. The casing and jacking procedures shall conform to the requirement of the Florida Department of Transportation's 2017 Utility Accommodation Manual unless otherwise approved by the Building Official after consultation with the Public Works Commissioner and the Town Clerk;

(4) The Town's property and surface conditions shall be restored to their pre-construction condition or improved;

(5) The top of any conduit or casing shall maintain a minimum 30-inches clearance under the roadway surface unless otherwise approved by the Building Official or the Public Works Commissioner;

(6) The elevation of the part or portion of right-of-way affected by the right-of-way utilization shall not be higher or lower than it was prior to any action in the right-of-way utilization taken by the person;

(7) In the event that a paved surface must be cut or any road base disturbed to undertake the right-of-way utilization, proper post-construction compaction, in

accordance with the applicable Pinellas County standards, will be required so that the elevations of the area or areas remain the same as they were prior to the right-of-way utilization; and

(8) Appropriate materials and standards shall be used in restoring the right-of-way to its prior existing condition.

(c) The contractor shall maintain traffic on the roadway. Compliance with all Florida Department of Transportation safety regulations for construction zones shall be maintained. Workers and equipment not actively engaged in the immediate construction activity shall be kept clear of the pavement.

(d) All work done as part of the utilization of a right-of-way shall be subject to inspection by the Town with the inspection schedule to be set forth in each Right-of-Way Utilization Permit.

Sec. 19-6. – Remedial actions.

(a) Any person utilizing any portion of any right-of-way, either with or without the permission of the Town, shall as soon as practicable, restore, replace, or repair such right-of-way to its previous exiting condition in accordance with the standards set forth in this Chapter.

(b) Each person shall be responsible for the cost of restoring, replacing, or repairing any facilities or areas of right-of-way which the person has damaged.

(c) Should a person fail to cure or restore, replace, or repair the affected part or portion of the right-of-way to its previous existing condition within ten days of the completion of the work which necessitated the cure, restoration, replacement, or repair in or of the right-of-way, the Town shall advise such person that he is in further violation of this Code by issuing to that person a "notice to cure." The notice to cure shall:

(1) Include a statement of facts constituting a violation of this Chapter; and

(2) Include a statement that a failure to cure the stated violations within ten days after the date of such notice, or within such longer period of time stated in the notice if the Town determines a longer period of time to be necessary and appropriate, shall constitute grounds for the Town to exercise any remedies or rights that the Town may have at law or in equity arising from such failure to cure.

(3) After the Town has provided such notice, or within such longer length of time specified in the notice to cure, then the Town may exercise any remedies or rights the Town may have at law or in equity arising from such actions, including the invocation of

the bond required by section 19-7 and including remedies for violations as set forth in Section 1-14 of this Code.

Sec. 19-7. – Bond required.

(a) A performance bond, or other financial security, in form, content, and execution approved by the Town Attorney, shall be provided to the Town to protect the Town in the event that the specified Right-of-Way Utilization work:

(1) Is incomplete within the time specified on the Right-of-Way Utilization Permit;

(2) Is not performed in accordance with the construction standards of this Chapter or with the terms and conditions of the permit;

(3) Results in damages to the right-of-way or any public property and said damages have not been repaired in accord with good engineering practices; or

(4) When the work is nonconforming as determined by the Public Works Commissioner or the Building Official.

(b) The refundable performance bond, or other security approved by the Town Attorney, shall be posted with the Town in the amount of two-thousand dollars ($2,000.00) as a guarantee that the work will be completed as required by this Chapter and by the terms and conditions of the Right-of-Way Utilization Permit and without any of the deficiencies identified in section 19-5 (b).

(c) If the work in question exceeds a value of two-thousand dollars ($2,000.00), the bond amount shall be increased by the difference between $2,000.00 and the actual value of the work, plus ten percent (10%) of that difference.

(d) In the course of reviewing a right-of-way utilization permit application, the Building Official, in consultation with the Town Clerk and the Public Works Commissioner, and after conferring with the applicant and the applicant's engineer of record, may determine that there are special circumstances attendant to the application and to the proposed work. Such determination shall be made based on the practices, policies, and procedures of the Florida Department of Transportation and of Pinellas County, and, if appropriate, on the Florida Building Code. If the Building Official determines that such special circumstances exist, he may recommend to the Town Board of Commissioners that the required bond amount may be greater or lesser than the amount calculated herein. The Town Board of Commissioners shall act on said recommendation at the public hearing required by section 1903 (b)(3).

(e) If, thirty days after the completion date established on the Right-of-Way Utilization Permit, the work pursuant to said Permit remains incomplete, or damage caused by said work remains unrepaired, the bond will be forfeited; otherwise, the bond will be refundable to the permit holder within thirty days after completion of specified work.

Sec. 19-8. – Fee.

Each application required by this Chapter shall be accompanied by a fee to be determined by Resolution of the Town Board of Commissioners, which fee shall be for filing, engineering, and inspection of the work done pursuant to the Right-of-Way Utilization Permit. The fee schedule for Right-of-Way Utilization Permits shall require payment of an additional fee for any subsequent inspection of the work as such inspections are established on the Permit.

Sec. 19-9. – Swales.

(a) Swales required.

(1) On all rights-of-way where drainage is presently provided in the form of a swale, no permit shall be issued for the construction of a new structure or for the expansion of an existing structure until the applicant provides, and the Town approves, a detailed drainage plan as required by § 6-59 of this Code.

(2) Said drainage plan shall include a detailed plan for the swale.

(3) The detailed plan for the swale shall be prepared in accordance with the technical specifications for swales adopted by Resolution 201__-__. The Town Board of Commissioners, with due public notice, and after a review by the Planning Board, may amend the technical specifications for swales in the manner prescribed by law.

(4) The technical specifications for swales shall, at a minimum:

a. Establish cross-sectional geometry including the shape and depth of the swale, grass height, maximum and minimum allowable slopes, and minimum height above the high water table;

b. Establish flow characteristics including minimum water quality, maximum allowable depth of runoff, the maximum velocity of runoff, and the maximum period for standing water to drain;

c. Ensure the stability of the swale; and

d. Provide for effective connections with the swales or drainage features on adjacent properties.

(5) Prior to the issuance of any certificate of completion or certificate of occupancy for the subject property, the engineer of record shall certify and the Building Official shall confirm, that the swale has been constructed in accordance with the approved plans and with the technical specifications for swales.

(b) Swale maintenance.

(1) Maintenance of the swale area is the responsibility of the owner of the property whose side property lines, if extended into the right-of-way, would encompass said swale.

(2) The swale area must always remain a pervious area approved by the Building Official and the engineer of record.

(3) The swale shall not be filled in or altered in any manner that will disturb its slope or impede the flow of water.

(4) All swales shall be kept clear of debris and any and all other matter that has the potential to disturb the slope of the swale or impede the flow of water in the swale.

(5) No drainage pipes may be installed in any swale until an engineer, duly licensed to practice in the State of Florida, certifies to the Building Official that the pipe(s) will function as the swale is intended to function and will not degrade the stormwater management system in the area.

(6) If drainage pipes are allowed in a swale, the openings to said pipes shall be kept open and free of debris and any and all other matter which might impede the flow of water into or out from the pipe.

Sec, 19-10. – Variances.

The Board of Adjustment, established pursuant to Article XI of Chapter 6 of this Code, shall have the following additional powers and duties:

(a) To authorize upon application, in specific cases, variances from the terms of this chapter, provided that:

(1) The variance will not be contrary to the public interest;

(2) where, owing to special conditions, a literal enforcement of the provisions of this chapter would result in unnecessary and undue hardship; and

(3) Special conditions and circumstances exist which are peculiar to the right-of-way involved and which are not applicable to other rights-of-way in the Town.

Section 3. This ordinance creates Chapter 19.5 – Driveway Connections, as follows:

Chapter 19.5 – Driveway Connections.

Sec. 19.5-1 - Definitions.
The following words, terms, and phrases, when used in this Chapter, shall have the meanings ascribed to them in this Chapter, except where the context clearly indicates a different meaning:

(a) *Corner Lot* means a lot abutting on two intersecting or intercepting streets, where the interior angle of intersection or interception does not exceed 135 degrees.

(b) *Driveway* means a paved or unpaved access strip of land providing a vehicular connector between the paved portion of a public right-of-way and the parking space or garage of a private or public property. A driveway generally is located on both the public right-of-way and on the adjacent private property.

(c) *Unified Control* means two or more abutting or contiguous lots in a single ownership.

Sec. 19.5-2 - Permit required.

(a) No driveway may be built on, or connected to, any Town right-of-way until a permit therefor has been issued by the Building Official.

(b) No existing driveway connected to any Town right-of-way may be modified until a permit for such modification has been issued by the Building Official.

(c) No permit shall be issued for the construction of a new structure or for the repair or expansion of an existing structure, or for a modification of an existing driveway, until the applicant provides, and the Town approves, a detailed driveway connection plan as required by this Chapter, and issues a permit for said driveway.

Sec. 19.5-3 – Constructions standards.

(a) No corner property with frontage on Gulf Boulevard (State Road 699) shall have a driveway on Gulf Boulevard.

(b) No property in unified control at the time of the issuance of building permits for new construction shall be permitted more than one driveway to a public right-of-way.

(c) All driveways shall comply with the following dimensional requirements:

(1) Minimum width, single family dwelling: 10 feet;

(2) Minimum width, duplex dwelling: 20 feet; and

(3) Maximum width, 30 feet.

(d) Driveways may consist of any one of the following:

(1) Asphalt, subject to compliance with the technical specifications adopted by Resolution 201__-__;

(2) Concrete, subject to compliance with the technical specifications adopted by Resolution 201__-__;

(3) Gravel or shell, provided that the Building Official determines that said material is consistent with, and appropriate for, the right-of-way and the area; or

(4) Pavers, if installed in accordance with Pinellas County Standard Detail 1345 and subject to the following:

a. Paver driveways shall be installed and at all times maintained in compliance with Americans with Disabilities Act (ADA) requirements, if applicable.

b. The owner of the property served by or upon which a paver driveway is or was previously installed is solely responsible for all maintenance and repair of the paver driveway within the Town right-of-way. The Town shall not be liable for the costs of any maintenance, repair, or replacement of the paver driveway regardless of the reason(s) requiring the maintenance or repair.

c. In the event any property owner fails to maintain and repair the paver materials within the Town right-of-way, the Town may, without prior notice to the property owner, perform the necessary maintenance, repair, or

replace any portion of the driveway within the Town right-of-way, using any materials approved by this code. In no circumstances shall the Town be obligated to replace pavers. Alternatively, if the Building Official deems appropriate, the property owner may be given notice and an opportunity to bring the driveway into compliance with this Code. The property owner is responsible for the costs of any restoration or repairs made by the Town pursuant to this Chapter;

d. A property owner, occupant, or agent shall regularly inspect a sidewalk composed of pavers. Where a sidewalk composed of pavers is in the public right-of-way and in violation of this Code, the owner, occupant, or agent thereof, must repair or replace the damage in the manner provided in this Chapter for the construction of new sidewalks at his or her own cost. If the owner, occupant, or third party does not repair or replace the noncompliant pavers, the Town may perform any repairs or replacement the Town deems is warranted at the expense of the owner;

e. No owner, occupant, or agent of any property may allow sidewalks composed of pavers to be in violation of this section;

f. A permit shall not be issued for the installation of a paver sidewalk if the Town has not been fully compensated for prior expenses incurred in removing, repairing, or replacing a noncompliant paver sidewalk on the subject property.

(e) The detailed plan for the driveway shall be prepared in accordance with the technical specifications for driveways adopted by Resolution 201__-__. The Town Board of Commissioners, with due public notice, and after a review by the Planning Board, may amend the technical specifications for driveways in the manner prescribed by law.

(f) The technical specifications for driveways shall, at a minimum:

(1) Provide for the installation of culverts under driveways;

(2) Provide for swales, curbs, gutters or other drainage features, as appropriate;

(3) Provide for the establishment and maintenance of appropriate stormwater flows;

(4) Provide for the appropriate interconnection of stormwater management and drainage facilities;

(5) Provide for required elevations; and

(6) Provide detailed, minimum, specifications for permitted driveway surfaces.

Sec. 19.5 – 4 – Driveway maintenance.

(a) The owner of the property served by a driveway shall be responsible for the maintenance of the entire driveway from the edge of pavement to the property line and within the property.

(b) The right-of-way portion of all driveways and parking areas shall be kept in a proper state of repair, maintained free of cracks, potholes, and other defects, including other uneven surfaces or hazards.

(c) Repairs or maintenance required by this section shall be completed by the property owner not more than thirty days after the property owner receives, by personal delivery, posting, or by certified mail, notice that repair or maintenance of the driveway is required. Upon a good faith showing by property owner that he is diligently and expeditiously proceeding with the required repairs or maintenance but that said repairs cannot be accomplished within the required 30-day period, the Building Official may allow a longer period in which the repairs or maintenance must be accomplished.

(d) If the repairs required by this section are not completed within the 30-day period specified by this section, then the Town shall make said repairs and recover the cost thereof as provided by § 337.402, Florida Statutes as to utilities and shall enforce Section 1.14 of the Town Code as to other violators.

Sec. 19.5-5 – Relocation provisions.

(a) In the event of any widening, repairs, installation, construction, or reconstruction, by or for the Town or Pinellas County, of any Town or county facility within the right-of-way in which the permit holder or owner has constructed any installation, such permit holder or owner shall move, remove, or relocate such installation as may be required for the public convenience as and whenever specified by the Town and at the permit holder's or owner's own expense. The same duty to move, remove, or relocate shall apply if an installation is determined to be unreasonably interfering in any way with the convenient, safe, or continuous use of the right-of-way.

(b) When relocation is required under this section, Town owned and maintained facilities shall be given priority in establishing new utility and installation alignments within the right-of-way. Pinellas County owned and maintained facilities shall be given second priority in establishing new utility and installation alignments within the right-of-way.

Sec. 19.5-6 – Indemnification.

A person, including the Town, that is injured, aggrieved, or against whom a civil action for damage, injunction, or other relief is brought to recover for injuries or damage arising out of a violation of this section, or to correct a condition in violation of this section, may bring a civil action in any court of competent jurisdiction against the adjacent or abutting property owner, occupant, or agent of such property, or third party who contributed to the violation of this section, for damages according to the percentages that the property owner, occupant, agent, or third party's violation, negligence or wrongful acts or omissions contributed to any alleged injuries or damages. The Town may assert as a defense in any such action that a violation of this chapter caused or allowed to be caused by an adjacent to abutting property owner, occupant, or agent of such property, or a third party reduces the Town's liability in whole or in part by such property owner, occupant, or agent of such property, or third party's violation, negligence wrongful acts or omissions.

Sec. 19.5-7 – Variances.

The Board of Adjustment, established pursuant to Article XI of Chapter 6 of this Code, shall have the following additional powers and duties:

(a) To authorize upon application, in specific cases, variances from the terms of this chapter, provided that:

(1) The variance will not be contrary to the public interest;

(2) where, owing to special conditions, a literal enforcement of the provisions of this chapter would result in unnecessary and undue hardship; and

(3) Special conditions and circumstances exist which are peculiar to the driveway connection involved and which are not applicable to other driveway connections in the Town.

Section 4. If any section, subsection, sentence, clause, provision or word of this Ordinance is held unconstitutional or otherwise legally invalid, same shall be severable and the remainder of this Ordinance shall not be affected by such invalidity, such that any remainder of the Ordinance shall withstand any severed provision, as the Board of Commissioners would have adopted the Ordinance and its regulatory scheme even absent the invalid part.

Section 5. This Ordinance shall become effective concurrently with the effective date of Ordinance 2018-13.

PASSED AND ADOPTED by the Board of Commissioners of the Town of Redington Beach, Pinellas County, Florida, on this _____ Day of _____ 201___..

ATTEST:

_____ _____

Missy Clarke, CMC Town Clerk Nick Simons, Mayor

	Motion	Seconded	Aye	Nay	Absent
Commissioner Kornijtschuk					
Commissioner Dorgan					
Commissioner Steiermann					
Vice Mayor Will					
Mayor Simons					

ATTACHMENT C

LOCAL GOVERNMENT COMPARISONS

EXISTING BOND REQUIREMENTS

OTHER PINELLAS COUNTY LOCAL GOVERNMENTS

PINELLAS COUNTY
LOCAL GOVERNMENT R/W UTILIZATION
REQUIREMENTS
SUMMARY

R/W Use Comps
06/11/18
Rev'd 06/28/18

GOVERNING REGULATIONS

JURISDICTION	REQUIRED	RoW PERMIT BOND REQ'D	SECTION	DRIVEWAY PERMIT	SECTION
Pinellas County	Yes	Yes	170-269	Yes	170-199
Belleair	No	N/a	N/a	Yes	74-155
Belleair Beach	(1)	Yes	50-92	No	
Belleair Bluffs	Yes	Yes	138-15	Yes	LDC
Belleair Shores	N/a	N/a		N/a	
Clearwater	Yes	Yes	28-43	Yes	28-52
Dunedin	Yes	Yes	78-519	Yes	105-31.13
Gulfport	Yes	No		No	
Indian Rocks Beach	Yes	No		Yes	54-61
Indian Shores	Yes	Yes	66-42	No	
Kenneth City	Yes	Yes	66-353	Yes	66-118
Largo	Yes	Yes (2)	21-111	No	
Madeira Beach	Yes	Yes	58-143	Yes	58-33
North Redington Beach	Yes	Yes	62-36	Yes	62-36
Oldsmar	Yes	Yes	58-95	Yes	58-43
Pinellas Park	Yes	Yes	14-103	No	
Redington Beach					
Redington Shores	No	N/a	N/a	Yes	129-3
Safety Harbor	Yes	No	N/a	Yes	149.00
Seminole	Yes	Yes	40-38	Yes	38-61
South Pasadena	Yes	No	N/a	Yes	176-10
St. Pete Beach	No	No	N/a	No	
St. Petersburg	Yes	Yes	25-304	Yes	16-40
Tarpon Springs	Yes	Yes	15-19	Yes	129.00
Treasure Island	Yes	No	N/a	No	

NOTES
(1) Telecommunication Utilities Only
(2) Telecommunications use only

ATTACHMENT D
CODE APPENDIX B – FRANCHISES

APPENDIX B - FRANCHISES[1]

Footnotes:

--- (1) ---

Editor's note— Ord. No. 99-1, adopted Jan. 15, 1999, was not specifically amendatory thus provisions have been included as §§ 1—28 at the town's request to read as herein set out. See the Code Comparative Table.

ARTICLE I. - TIME WARNER COMMUNICATIONS CABLE FRANCHISE

Sec. 1. - Short title.

This ordinance shall be known and cited as the "Time Warner Communications Cable Franchise Ordinance". Within this document it shall also be referred to as "this Franchise" or "the Franchise".

(Ord. No. 99-1, § I, 1-15-99)

Sec. 2. - Definitions.

For purposes of this Franchise, the following terms, phrases, words and their derivations shall have the meaning given herein. When not inconsistent with the context, words used in the present tense include the future tense, words in the plural number include the singular number and words in the singular number include the plural number. The words "shall" and "will" are mandatory and "may" is permissive. Words not defined shall be given their common and ordinary meaning.

Basic service means that service tier which includes the retransmission of local television broadcast signals.

Cable communications system or *system* means a facility consisting of a set of closed transmission paths associated signal generation, reception, and control equipment that is designed to provide cable services and which is provided to multiple subscribers within the town. Such term does not include:

1) A facility that serves only to retransmit the television signals of one (1) or more television broadcast stations;
2) A facility that serves only subscribers in one (1) or more multiple unit dwellings under common ownership, control, or management, unless such facility or facilities uses any public right-of-way;
3) A facility of a common carrier which is subject, in whole or in part, to the provisions of Title II of the Communications Act of 1934 except that such facility shall be considered a cable system to the extent such facility is used in the retransmission of video programming directly to subscribers; or
4) Any facilities of any electric utility used solely for operating its electric utility systems.

Cable service means (1) the one-way transmission to subscribers of video programming (i.e., programming provided by, or generally comparable to programming provided by, a television broadcast station) and (2) subscriber interaction, if any, which is required for the selection of such video programming.

Town shall mean the Town of Redington Beach, its employees, agents, commissioners, or public servants, as the same now or in the future may exist.

FCC means the Federal Communications Commission or any successor thereto, having jurisdiction over cable television.

Force majeure means a strike, acts of God, acts of public enemies, orders of any kind of a government of the United States of America or of the state or any of their departments, agencies, political subdivisions; riots, epidemics, landslides, lightning, earthquakes, fires, hurricanes, tornadoes, volcanic activity, storms, floods, washouts, droughts, civil disturbances, explosions, partial or entire failure of utilities or any other cause or event not reasonably within the control of the disabled party.

Grantee means TWE-A/N Partnership d/b/a Time Warner Communications its agents, lawful successors, transferees or assignees.

Gross revenues means all service fees, installation charges, and all other fees or charges collected from the provision of cable services to subscribers of the system. Gross revenues shall not include (1) excise taxes; or (2) sales taxes or any other taxes or fees, including the franchise fee, which are imposed on the Grantee or any subscriber by any governmental unit and collected by the grantee for such governmental unit.

Person means any corporation, partnership, proprietorship or organization authorized to do business in the state or any natural person.

Public property means any real property other than a street owned by any governmental unit.

State means the State of Florida.

Street means the surface of and the space above and below any street, road highway, freeway, lane, path, way, alley, court, sidewalk, boulevard, parkway, drive, or any public easement or right-of-way now or hereafter held by the town which shall entitle grantee to the use thereof for the purpose of installing or transmitting over poles, wires, cables, conductors, ducts, confluents, vaults, manholes, amplifiers, appliances, attachments and other property as may be ordinarily necessary and pertinent to a system.

(Ord. No. 99-1, § II, 1-15-99)

Sec. 3. - Grant of authority.

For the purposes of constructing, operating and maintaining a system in the town, Grantee may erect, install, construct, repair, replace, relocate, reconstruct and retain in, on, over, under, upon, across and along the streets, including over public rights-of-way and through casements, within the town such lines, cables, conductors, ducts, confluents, vaults, manholes, amplifiers, appliances, pedestals, attachments and other operating equipment as are necessary, and pertinent to the operation of the system.

(Ord. No. 99-1, § III, 1-15-99)

Sec. 4. - Compliance with applicable laws and ordinances.

(a) This Franchise is granted pursuant to the terms and conditions contained herein. Such terms and conditions shall be subordinate to all applicable provisions of state and federal laws, rules and regulations.

(b) Grantee's rights are subject to the police powers of the town to adopt and enforce ordinances necessary to the health, safety and welfare of the public that are not otherwise inconsistent with the terms and conditions of this Franchise. Grantee shall comply with all applicable general laws and ordinances enacted by the town pursuant to that power.

(Ord. No. 99-1, § IV, 1-15-99)

Sec. 5. - Territorial area involved.

This Franchise is granted for the territorial boundary of the town. In the event of annexation by the town, any new territory shall become part of the area covered.

(Ord. No. 99-1, § V, 1-15-99)

Sec. 6. - Franchise term.

This Franchise shall commence upon the effective date of this ordinance [February 15, 1999] and shall expire fifteen (15) years thereafter unless renewed, revoked or terminated sooner as herein provided.

(Ord. No. 99-1, § VI, 1-15-99)

Sec. 7. - Franchise non-exclusive.

The Franchise granted herein is non-exclusive. The town specifically reserves the right to grant, at any time, one or more additional franchises for a system in accordance with state and federal law; provided, however, no such future franchise shall be granted on terms more favorable or less burdensome than those contained herein. In the event a future franchise is granted on terms more favorable or less burdensome than those contained herein, then this Franchise shall be deemed amended as of the effective date of the future franchise to incorporate the more favorable or less burdensome term(s) or condition(s) herein.

(Ord. No. 99-1, § VII, 1-15-99)

Sec. 8. - Written notice.

All notices or demands required to be given under this Franchise shall be deemed to be given when delivered personally to the persons designated below or upon the date actually received as evidenced by registered or certified mail receipt addressed as follows:

If to the town:	of Redington Beach
	105-164 Avenue
	Redington Beach, FL 33708
If to Grantee:	Time Warner Communications
	Vice President/ General Manager, Pinellas County Region
	2530 Drew Street

	Clearwater, FL 33765

Such addresses may be changed by either party upon notice to the other party given as provided in this section.

(Ord. No. 99-1, § VIII, 1-15-99)

Sec. 9. - Repair of streets and property.

Any and all streets or public property or private property which are disturbed or damaged during the construction, repair, replacement, relocation, operation, maintenance or reconstruction of the system shall be promptly repaired by Grantee to a condition as good as that prevailing prior to Grantee's work.

(Ord. No. 99-1, § IX, 1-15-99)

Sec. 10. - Construction and use of facilities.

A) Subject to the town's approval, the Grantee shall have the right to erect and maintain its own poles at locations as it may find necessary for the proper construction and maintenance of the cable communications system. Approval shall be procured by the Grantee from the proper town department providing for the erection of these poles.

B) The Grantee's transmission and distribution system poles, wires, appurtenances, shall be located, erected, and maintained, so as not to endanger or interfere with the lives of persons or to interfere with any improvements the town may deem proper to make or to unnecessarily hinder or obstruct the free use of the streets, alleys, bridges, sidewalks, or other public property. Removal or relocation of poles or equipment when necessary to avoid such interference shall be at the Grantee's expense.

C) Construction and maintenance of the system shall be performed in an orderly and workmanlike manner. Grantee shall at all times comply with the National Electrical Safety Code and such applicable ordinances and regulations of the town affecting electrical and structural installations which may be presently in effect or changed by future ordinance.

D) All installations of cable distribution facilities shall be of a permanent nature, durable, installed in accordance with good engineering practice, and of such sufficient height to comply with all existing town regulations, ordinances, and state laws, so as not to interfere with the right of the public or individual property owner and shall not interfere unduly with the travel and use of public places by the public during the construction, repair, or removal thereof, and shall not unduly obstruct or impede traffic.

E) The Grantee shall maintain its system so that cables, wires, poles and other facilities shall conform to the pattern of the existing public utility cables, wires, poles and other facilities, subject to the right of the town to require relocation, either overhead or underground, of such cables, wires, poles and other facilities when the town determines that such relocation is necessary and in the public interest but not for arbitrary and capricious reasons. Any such relocation shall be at the Grantee's expense unless any utility is compensated for such relocation in which case the Grantee shall be similarly compensated.

F) The Grantee shall maintain its system so that poles, and other structures of public utilities which are available shall be used to the extent practicable to minimize interference with travel. Before placing or setting new poles, the Grantee shall file notice of such intention with the town and specify the location, height, and dimensions, of the poles and notify affected residents whose property may be

disturbed. The construction shall not be commenced until the specifications have been submitted to the appropriate town agency and the Grantee has received its written approval, which shall not be unreasonably withheld or delayed.

G) Whenever by reason of the construction, repair, maintenance, relocation, widening, raising, lowering of the grade, or vacation of any street by the town or by the location or manner of construction, reconstruction, maintenance or repair of any public property, structure or facility by the town, or any public improvement, municipally owned or operated utility services or pursuant to any plan adopted by the town, or any public improvement, municipally owned or operated utility services or pursuant to any plan adopted by the town for rehabilitating any section of the town, it shall be deemed necessary by the town for the Grantee to move, relocate, change, alter or modify any of its facilities or structures, such change, relocation, alteration or modification shall be promptly made by the Grantee. Any such relocation shall be at the Grantee's expense unless any utility is compensated for such relocation in which case the Grantee shall be similarly compensated. In the event the Grantee, after such notice, fails or refuses to commence, pursue or complete such relocation work within a reasonable time, the town shall have the authority, but not the obligation, to remove or abate such structures of facilities and to require the Grantee to pay to the town the cost of such relocation, alteration, or modification. If the Grantee fails to complete in a timely manner, any relocation requested by the town and the town incurs any costs resulting from such delay, the Grantee shall be liable to the town for such costs.

H) The Grantee shall upon request of any person holding [a] building moving permit or permit to move oversize loads issued by the town, temporarily raise or lower its wires to permit the moving of buildings or oversize loads. The expense of such temporary removal or raising or lowering of the wires shall be paid by the person requesting the same and Grantee shall have the authority to require such payment in advance. The Grantee shall be given not less than seventy-two (72) hours advance notice to arrange for such temporary changes.

I) The Grantee shall have the authority to trim trees upon and overhanging the streets of the town as to prevent the branches of such trees from coming in contact with the Grantee's wires and cables subject to acquiring a permit from the town and notification to the town.

System rebuild schedule: By no later than eighteen (18) months after the effective date of this franchise agreement [Aug. 15, 2000], Grantee shall complete an upgrade of its cable system in the franchise area in accordance with the following system design requirements:

a. The system in it entirety shall use at least 750 MHz equipment capable of one (1) downstream channel capacity in the frequency spectrum from 50 to 750 MHz and two (2) upstream channel capacity in the frequency spectrum of from 5 to 40 MHz or similar capacity in an alternate spectrum with the upstream channels to be activated. Upon completion of the upgrade, no less than 78 channels of programming will be available to subscribers.

b. The equipment and components utilized in the system rebuild will be high quality, durable, and reliable, and will allow Grantee to comply with all requirements of this franchise agreement.

c. The system will be designed so that an average of no more than five hundred (500) homes will be served per node.

d. The system shall be constructed and operated in accordance with performance standards which meet or exceed FCC regulations.

e. In accordance with applicable federal law, the Grantee shall not scramble or encrypt the basic service so as to require the use of a converter.

(Ord. No. 99-1, § X, 1-15-99)

Sec. 11. - Financial liability and indemnification.

A.) Indemnity and liability coverage. The Grantee shall indemnify and hold harmless the town, its officers, boards, commissions, agents, and employees from and against any and all claims, suits, actions, damages, and causes of action arising during the term of this agreement for any bodily injury, loss of life, or damage to property, sustained by any person, firm, corporation, or other business entity as the result of the construction, operation, and maintenance of the cable system by the Grantee, or the failure by the Grantee to keep, maintain, and abide by each and every covenant of this agreement on its part to be kept or performed or as a result of any negligence, act error, or omission of the Grantee or its employees, agents, or servants; and shall further indemnify and save the town harmless from and against any and all suits, actions, damages, and causes of action arising during the term of this agreement for any bodily injury, loss of life, or damage to property which may be imposed or claimed against the town by virtue of the Franchise granted hereunder. However, under the terms of this article, the Grantee shall be deemed to be an independent contractor. The Grantee, with regard to any and all of the matters set forth above, shall indemnify and save the town harmless from and against all costs, attorney fees (at all trial and appellate levels) expenses, and liabilities incurred by the town in and about any such claim, suit, action, or cause of action (at all trial and appellate levels), the investigation thereof, or the defense of any action or proceeding brought thereon, and from and against any orders, judgements, or decrees which may be entered therein or as a result thereof. The Grantee shall also further specifically defend any action or proceeding brought against the town as a result of any of the matters enumerated above, at the Grantee's sole cost and expense. The Grantee shall keep in full force and effect at all times during the term of this agreement a comprehensive general liability insurance policy providing coverage for personal injury and/or death and property damage in the amounts of $2,000,000.00 for any accident or occurrence, $1,000,000.00 for any one person, and $250,000.00 for property damage together with excess liability coverage in umbrella form in the amount of $5,000,000.00. The town shall be named as an additional insured on any policy. In the event that any other person, firm, company, or corporation doing business within the town requires Grantee to furnish in amounts greater than those indicated above as the result of any agreements or contracts with such person, firm, company, or corporation, then Grantee shall increase its insurance coverages hereunder accordingly. All insurance required by the Grantee under this section shall be unaffected by an insurance which the town may carry in its own name.

B.) In order for the town to assert its rights to be indemnified and held harmless, the town must:

1.) Promptly notify Grantee of any claim or legal proceeding which gives rise to such right;

2.) Afford Grantee the opportunity to participate in and fully control any compromise, settlement, resolution, or disposition of such claim or proceeding; and

3.) Fully cooperate in the defense of such claim and make available to Grantee all such information under its control relating thereto.

C.) In the event the town, in its sole discretion, determines that its interests cannot be represented in good faith by Grantee, Grantee shall pay all expenses incurred by the town in defending itself with regard to all damages and penalties mentioned in paragraph A above. These expenses shall include all out-of-pocket expenses, such as attorney's fees and costs.

(Ord. No. 99-1, § XI, 1-15-99)

Sec. 12. - Compliance with applicable laws.

All work undertaken in connection with the construction, reconstruction, maintenance, operation or repair of the Grantee's system shall be subject to and governed by all present laws, rules and regulations of the town, the state and the United States of America, including the FCC and any other federal agency having jurisdiction.

(Ord. No. 99-1, § XII, 1-15-99)

Sec. 13. - Notice of rate increases.

Prior to implementing any rate increase for basic, standard or premium service, Grantee shall give the following notices:

A) At least thirty (30) days advance notice to the town and;

B) At least thirty (30) days advance notice to subscribers.

(Ord. No. 99-1, § XIII, 1-15-99)

Sec. 14. - Performance standards.

A) The Grantee shall construct, operate and maintain its system according to the specifications of the FCC.

B) The Grantee's system shall be designed and rated for twenty-four (24) hour a day continuous operation.

C) The Grantee shall at all times employ a reasonable standard of care to prevent failures or accidents which are likely to cause damages, injuries or nuisances to the public.

D) The Grantee shall render efficient service, make repairs within a 48-hour business day cycle if access to the customer's house is available during that time period, and interrupt service only for good cause and for the shortest times possible. Insofar as possible, such interruptions shall be preceded by notice and shall occur during periods of minimum use of the system.

E) The Grantee shall furnish, without installation charge and without monthly fees, basic service and one (1) outlet to each public school within the town and located within 150 feet of the system.

F) The Grantee shall provide a parental control device capability for a reasonable charge, upon request, to any subscriber.

(Ord. No. 99-1, § XIV, 1-15-99)

Sec. 15. - Subscriber complaints.

A) During the term of this Franchise, the Grantee shall maintain a local or toll-free telephone number for the purpose of receiving and resolving all complaints regarding the quality of service, equipment malfunctions, billing inquiries and similar matters. The Grantee shall provide trained personnel to receive and process telephone and in-person calls concerning service problems during normal business hours. Outside of normal business hours, the Grantee may provide an answering service or answering machine to receive telephone calls concerning service problems.

B) As subscribers are connected or reconnected to the system, the Grantee shall, by appropriate means, such as a card or brochure, furnish information concerning the procedures for making inquiries or complaints, including the name, address and local telephone number where such inquiries or complaints are to be addressed.

C) When there have been similar complaints made, or where there exists other evidence, which in the judgment of the town casts doubt on the reliability or quality of the system, the town shall have the right and authority to require that the Grantee test, analyze, and report on the performance of the system. The Grantee shall fully cooperate with the town in performing such testing and shall prepare results and a report, if requested, within five (5) days notice. Such report shall include the following information:

1) The nature of the complaint or problem which precipitated the special tests.

2) What system component was tested.

3) The equipment used and procedures employed in testing.

4) The method, if any, in which such complaint or problem was resolved.

5) Any other information pertinent to said tests and analysis which may be required.

D) The town may require that tests be monitored by a professional engineer selected by the town at the town's expense.

(Ord. No. 99-1, § XV, 1-15-99)

Sec. 16. - Services to the town.

A) Grantee shall make available to the town at no cost one (1) channel to be used by the town for non-commercial governmental access purposes.

B) Grantee will provide without charge one (1) outlet of basic service and the most popular tier of service above basic to each municipal building.

C) In the event the town constructs or relocates to a new town hall after the effective date of this franchise then, upon prior written notice, the Grantee shall:

1. Wire the new town hall for cable service provided that Grantee is able to coordinate with comparable electrical wiring installation;

2. Extend the cable system so as to provide cable service to the town hall; and

3. Reimburse the town for the reasonable expenses incurred by the town in relocation and facilities or equipment owned by the town to produce programming to be carried on the cable system or at the Grantee's discretion relocate such facilities or equipment itself.

4. In lieu of any requirement for PEG access equipment and/or support, Grantee will provide to town a one time grant of $3,000.00.

(Ord. No. 99-1, § XVI, 1-15-99)

Sec. 17. - Transfer of assignment of Franchise.

The rights granted herein shall not be transferred or assigned by the Grantee without written consent of the town commission. Such consent shall not be unreasonably withheld. No transfer or assignment shall become effective until the transferee or the assignee has filed with the town its written acceptance of the terms and conditions of this Franchise. Notwithstanding anything to the contrary, no such prior consent shall be required for a transfer or assignment to any person controlling, controlled by or under the same common control as the Grantee.

(Ord. No. 99-1, § XVII, 1-15-99)

Sec. 18. - Franchise renewal.

This Franchise shall be renewed in accordance with applicable state and federal law.

(Ord. No. 99-1, § XVIII, 1-15-99)

Sec. 19. - Town's right to revoke.

In addition to all other rights which town has pursuant to law or equity, the town reserves the right to revoke, terminate or cancel this franchise and all rights and privileges pertaining thereto in the event that:

A) Grantee violates any material provision of this franchise; or

B) Grantee practices any fraud upon the town; or

C) Grantee becomes insolvent, unable or unwilling to pay its debts, or is adjudged bankrupt or a receiver is appointed to it.

(Ord. No. 99-1, § XIX, 1-15-99)

Sec. 20. - Revocation procedures.

In addition to all other rights and powers pertaining to the town by virtue of this Franchise or otherwise, the town reserves, subject to the provisions of the Cable Communications Policy Act, the right to terminate and cancel this Franchise and all rights and privileges of the company hereunder in the event that the company:

A) Materially violates any provision of this Franchise or any rule, order or determination of the town made pursuant to this Franchise and that violation remains uncured, except where such violation, other than of subsection B below, occurs which is without fault or through excusable neglect of the company, or occurs as a result of circumstances beyond company's control;

B) Becomes insolvent, unable or unwilling to pay its debts, or is adjudged bankrupt; or

C) Attempts to evade any of the provisions of the Franchise or practices any fraud or deceit upon the town.

The town shall make a written demand by certified mail that the company comply with any provision, rule, order or determination under or pursuant to this Franchise ordinance. If the violation by the company continues for a period of 30 days following such written demand without written proof that corrective action has been taken or is being actively and expeditiously pursued, the town may consider terminating the Franchise ordinance; provided, however, a written notice thereof shall be given to the company at least 60 days in advance and the company must be given an opportunity to appear before the commission to present its arguments.

Should the town determine, following the public hearing, that the violation by the company was the fault of the company and within the company's control, the town may, by ordinance, declare that the Franchise be forfeited and terminated, provided, however, the town may, in its discretion, provide an opportunity for the company to remedy the violation and come into compliance with the Franchise so as to avoid termination.

Such termination and cancellation shall be by ordinance duly adopted after 60 days notice to the company, and shall in no way affect any of the town's rights under this Franchise or any provision of law.

(Ord. No. 99-1, § XX, 1-15-99)

Sec. 21. - Removal upon revocation.

Upon the revocation, including all appeals, of this Franchise as herein provided, Grantee shall remove all of its attachments and wires from poles used as authorized herein. This shall not exceed one year.

(Ord. No. 99-1, § XXI, 1-15-99)

Sec. 22. - Force majeure.

If by reason of a force majeure any party is unable in whole or in part to carry out is obligations hereunder, that party shall not be deemed to be in violation or default during the continuance of such inability.

(Ord. No. 99-1, § XXII, 1-15-99)

Sec. 23. - Maps.

Upon request of the town, Grantee shall maintain on file with the town a true and accurate map or set of maps showing all system equipment installed and in place in streets and other public places.

(Ord. No. 99-1, § XXIII, 1-15-99)

Sec. 24. - Service area.

A) Residents in those areas with an average density of at least forty (40) homes per aerial mile or eighty (80) homes per underground mile, as measured from the nearest point of usable trunk, shall be provided service upon payment of the standard installation charge and applicable monthly fees; except that installations requiring underground drops or aerial drops in excess of one hundred and fifty (150) feet shall be considered a non-standard installation to be charged to the subscriber at Grantee's actual cost of installation.

B) Service to homes not meeting those density requirements of paragraph (A) above shall be provided on a time plus material basis.

(Ord. No. 99-1, § XXIV, 1-15-99)

Sec. 25. - Unauthorized connections or modifications.

A) It shall be unlawful for any person, without the expressed consent of the Grantee to make any connection, extension, or division whether physically, acoustically, inductively, electronically or otherwise with or to any segment of the system for any purpose whatsoever.

B) It shall be unlawful for any person to willfully interfere, tamper, remove, obstruct or damage any part, segment or content of the system for any purpose whatsoever.

C) It shall be unlawful for any person to construct, operate or maintain a system without having first applied for and received a Franchise from the town.

D) Any person convicted of a violation of this section shall be subject to the penalty provisions of the town which penalty provision are incorporated herein by reference.

(Ord. No. 99-1, § XXV, 1-15-99)

Sec. 26. - Franchise fee payments.

The Grantee shall pay to the Grantor a Franchise fee in the amount of five percent (5%) per year of the gross revenues derived in such period from the operation of the cable system to provide cable services.

In the event that federal law is amended to permit the Franchise fees paid by a cable operator with respect to any cable system to exceed five percent (5%) of the cable operator's gross revenues, then the Grantor may, upon ninety (90) days prior written notice to Grantee, require that the Franchise fees paid to the Grantor be in such higher amount, not to exceed the then applicable maximum under federal laws.

Payment shall be due and payable on April 1 of each year for the previous calendar year. The Grantor shall have the right to audit, a reasonable times and planes, the books and financial records of the Grantor to verify Franchise fee payments.

(Ord. No. 99-1, § XXVI, 1-15-99)

Sec. 27. - Reports.

Required reports. The Grantee shall file annually with the town clerk a copy of the following required reports:

A. Its report to its stockholders.

B. A statement of gross subscriber revenues applicable to its operations (Redington Beach only) during the preceding twelve (12) months.

C. On or before April 1 of each year during the time that this agreement remains in effect, the Grantee shall file with the town an annual report prepared in accordance with generally accepted accounting principles, certified to by a certified public accountant or by a financial officer of Grantee, showing the annual gross revenues of the Grantee during the preceding year.

D. Current listing, which shall include No. 2 above, of shareholders and bondholders. The Grantee shall keep on file with the town clerk a current list of its shareholders and bondholders.

   1. If company is a public corporation, the Grantee shall furnish annually a list of the major stockholders owning five percent or more of the outstanding shares.

   2. Said report shall contain any other information contained in the Grantee's report of the Securities and Exchange Commission and shall be filed with the town clerk at the same time that said report is filed with the Securities and Exchange Commission.

(Ord. No. 99-1, § XXVII, 1-15-99)

Sec. 28. - Severability.

If any term, condition or section of this franchise or the application thereof to any person or circumstance shall, to any extent be held to be invalid or unenforceable, the remainder hereof and the application of such term, condition or section to persons or circumstances other than those as to whom it shall be held invalid or unenforceable shall not be affected thereby, and this franchise and all the terms, conditions and sections hereof shall, in all other respects, continue to be effective and to be complied with.

(Ord. No. 99-1, § XXVII, 1-15-99)

ARTICLE II. - FLORIDA POWER CORPORATION[2]

Footnotes:

--- (2) ---

Editor's note— Ord. No. 10-09, adopted Oct. 5, 2010, amended Art. II to read as herein set out. Former Art. II, §§ 1—19, pertained to similar subject matter, and derived from Ord. No. 01-02, §§ 1—19, adopted Mar. 20, 2001.

Sec. 1. - Findings.

The Town (also referenced herein as "Grantor") deems it necessary, desirable and in the interest of its citizens to establish by ordinance a right-of-way utilization franchise (sometimes referred to herein as the "Franchise") granting the Company (also referenced herein as "Grantee") permission to occupy the Rights-of-Way in the Town of Redington Beach, Florida, for the purpose of providing electric services.

(Ord. No. 10-09, § 1, 10-5-10)

Sec. 2. - Short title.

This ordinance shall be known and may be cited as the "Progress Energy Florida Right-of-Way Utilization Franchise."

(Ord. No. 10-09, § 2, 10-5-10)

Sec. 3. - Definitions.

For the purposes of this ordinance, the following terms, phrases, words, and their derivatives shall have the meaning given herein. When not inconsistent with the context, words in the present tense include the future, words in the plural number include the singular number, and words in the singular number include the plural number. The word "shall" is always mandatory and not merely permissive.

(A) "Adversely Affected" - For the Company, a loss of one percent (1%) of Base Revenues within the corporate Town limits due to Retail Wheeling. For the Town, a loss of one percent (1%) of franchise fees due to Retail Wheeling.

(B) "Base Revenues" means all Company's revenues from the retail sale of electricity, net of customer credits, to residential, commercial, and industrial customers and Town sponsored street lighting all within the corporate limits of the City.

(C) "Company" or "Grantee" - Florida Power Corp. d/b/a Progress Energy Florida Inc., its successors and assigns.

(D) "Town" or "Grantor" - The Town of Redington Beach, Florida.

(E) "Electric Energy Provider" means every legal entity or association of any kind (including their lessees, trustees or receivers), including any unit of state, federal or local government (including Town herein), which owns, maintains, or operates an electric generation, transmission, or distribution system or facilities, or which otherwise provides, arranges for, or supplies electricity or electric energy to the public, or which supplies electricity to itself utilizing Company's distribution or other facilities. Without limitation of the foregoing, "Electric Energy Provider" shall also include every Electric Utility, electric power marketer, or electric power aggregator. It shall also include every entity providing such services as metering, customer billing, payment collection and processing, and customer information and data processing.

(F) "Electric Utility" shall have the meaning set out in Section 366.02(2), Florida Statutes (2010), and shall also include every electric "Public Utility" as defined Section 366.02(1), Florida Statutes (2010). "Electric Utility" shall further include every investor owned, municipally or governmentally owned, or cooperatively owned electric utility (including their lessees, trustees or receivers), which owns, maintains, or operates an electric generation, transmission, or distribution system in any State or Country.

(G) "Electric Utility System" means an electric power system installed and operated in the Franchise Area in accordance with the provisions of the Florida Public Service Commission establishing technical standards, service areas, tariffs and operating standards, which shall include but not be limited to electric light, heat, power, and energy facilities, and a generation, transmission,

and distribution system, with such extensions thereof and additions thereto as shall hereafter be made.

(H) "Franchise Area" means that area for which Company provides electric utility service within the corporate Town limits of the Town.

(I) "Facilities" has the meaning as set forth in Section 4.

(J) "Person" means any person, firm, partnership, association, corporation, company or organization of any kind.

(K) "Public Service Commission" means the Florida Public Services Commission.

(L) "Rights-of-Way" - All of the Town owned public streets, alleys, highways, waterways, bridges, easements, sidewalks and parks, and any other public ways or places owned by the Town, as they now exist or may be hereafter constructed, opened, laid out or extended within the present limits of the Town, or in such territory as may hereafter be added to, consolidated or annexed to the Town.

(M) "Retail Wheeling"- A customer/supplier arrangement whereby an Electric Energy Provider utilizes transmission and/or distribution facilities of Company to make energy sales directly to an end use customer located within the Franchise Area.

(Ord. No. 10-09, § 3, 10-5-10)

Sec. 4. - Grant of authority.

(A) This grant of authority is limited to the provision by Company to place its Facilities within the Rights-of-Way for its electric utility services. Accordingly, the Town hereby grants to the Company, its successors and assigns the non-exclusive right, authority, and franchise to lay, erect, construct, maintain, repair and operate its Facilities in, under, upon, over and across the present and future Rights-of-Way, as they now exist or may be hereafter constructed, opened, laid out or extended within the present limits of the Town, including but not limited to conduits, cables, poles, wires, supports and such other structures or appurtenances as may be reasonably necessary for the construction, maintenance and operation of an electric generation, transmission and distribution system, including information, telecommunication, and video transmission used solely for the provision of electric service (collectively the "Facilities"), provided that all portions of the same shall conform to accepted industry standards, including but not limited to the National Electrical Safety Code. Nothing in this Ordinance shall require Grantee to remove, de-energize, or cease using any poles, wires, or other things or Facilities identified hereinabove that were in place under previous ordinances or permits prior to the Effective Date of this Ordinance, regardless of whether such poles, wires or other Facilities are located outside "Rights-of-Ways" as defined herein. Nor shall anything in this Ordinance prohibit Company from performing upgrades, replacements, maintenance or servicing of such poles, wires, or other Facilities after the Effective Date of this Ordinance. Rather, all such preexisting poles, wires, or other Facilities shall be authorized under this Ordinance. Because this Franchise is intended to grant Company the non-exclusive, but unrestricted right to place its Facilities within the Rights-of-Ways, the Town expressly acknowledges and agrees that Company shall not be required to pull or pay for permits to perform any work maintenance activities on or related to its Facilities within the Rights-of-Ways.

(B) Annexation or Contraction. Town and Company agree that the Franchise Area is subject to expansion or reduction by annexation and contraction of municipal boundaries. If Town approves any Franchise Area expansion or reduction by annexation or contraction, Town will provide written notice to Company's Annexation Coordinator, in accordance with Section 16 herein at the address provided below, within sixty (60) days of such approval and this Franchise shall automatically extend to include any such annexed areas.

Additionally, within sixty (60) days of any such annexation or contraction, Town shall provide to Company an updated list containing the new or removed street names, known street name aliases, street

addresses, and zip codes associated with each street name. All notices of annexation or contraction and address listings shall be addressed to the Annexation Coordinator as follows with the address subject to change:

Progress Energy
Annexation Coordinator
P. O. Box 33199
St. Petersburg, FL 33733-8199
Or by email to:
AnnexationRequests@pgnmail.com

Company must revise its payments due to any expansion or reduction by annexation within a reasonable time after Company has received such notice and updated list from Town, but no later than sixty (60) days after receipt of notice and the list. Town understands and affirmatively acknowledges that the Company will exclusively rely upon the Town to provide timely and accurate information to the Company regarding any such annexations or contractions, and that failure to do so will impair, inhibit, and/or preclude the Company's ability to revise any payments due to the Town that are impacted by such annexations or contractions. Further, Town acknowledges that if such information is not timely furnished to Company as required herein, any related obligation to collect payments shall be suspended during the period of delay.

(C) Non-Exclusive Use. The Company's right to use and occupy Rights-of-Way for the purposes herein set forth shall be non-exclusive as to entities not engaged in the provision of electric energy and service, and the Town reserves the right to grant to others the right to utilize the Rights-of-Way, to any person at any time during the period of this Franchise so long as such grant does not materially and adversely impact Company's right to use and occupy Rights-of-Way aforesaid. The franchise granted to the Company is subject to the Town's police powers as further described in Section 8 below.

(Ord. No. 10-09, § 4, 10-5-10)

Sec. 5. - Notice of acceptance and term of franchise.

This ordinance shall become effective upon being legally passed and adopted ("Effective Date") by the Town Board of Commissioners; and it is further agreed that Grantee shall accept this Franchise as of the date of the passage and adoption by the Town Board of Commissioners and shall signify its acceptance in writing within thirty (30) days after the Town Board of Commissioners' approval of this ordinance by filing its written acceptance with the Town Clerk. If Grantee fails to accept this franchise within (30) days of its date of passage, then this Ordinance shall be null and void, and of no force and effect of any kind. The term of the Franchise granted herein shall be for a period of (10) ten years commencing on the Effective Date.

(Ord. No. 10-09, § 5, 10-5-10)

Sec. 6. - Payment to town.

(A) Effective the first day of the second month beginning after the Effective Date of this ordinance, Town shall be entitled to receive from Company a monthly franchise amount that will equal six percent (6%) of Company's Base Revenues (the "Franchise Fee") for the preceding month, which amount shall be the total compensation due Town for any and all rights, authority and privileges granted by this Franchise, including compensation for any required permits, parking fees, or any other fee or cost related to the rights granted hereunder or to do business within the Franchise Area. The Town expressly acknowledges that no additional or other amounts shall be due or remitted by Company for the exercise of its rights granted hereunder.

Payment shall be made to Town for each month no later than the twentieth (20th) day of the following month. The monthly payment shall be made by wire transfer. Any monthly payment or any portion thereof made twenty (20) days after the due date without good cause shall be subject to interest calculated for each month of the underpayment period using the average monthly interest rate based on 30 day commercial paper, until all payments are made in full.

(B) Only disputed amounts shall be allowed to be withheld by Company, and any such amounts shall not accrue any interest during the pendency of any such dispute.

(Ord. No. 10-09, § 6, 10-5-10)

Sec. 7. - Favored nations.

(A) In the event Grantee shall hereafter accept an electric utility franchise ordinance from any municipality providing for the payment of a franchise fee in excess of that provided for in Section 6 above, Grantee shall notify Grantor, and Grantor reserves the right to amend this Franchise to increase the franchise fee payable under this ordinance to no more than the greater franchise fee that Grantee has agreed to pay to such other municipality. Grantee's obligation to pay such greater franchise fee to Grantor shall apply prospectively beginning with the next monthly franchisee fee payment following Grantor's timely notice of its exercise of its amendment right to which Grantee may collect such increased fee from its customers. Grantee's failure to notify Grantor of such additional payments does not limit Grantor's right to amend to require such additional franchise fees. However, in the event Grantee does not provide timely notice as required by this Paragraph, Grantor's amendment right shall, if exercised, relate back to the time at which Grantor could have first exercised that right hereunder if Grantor had been timely notified. Grantor shall notify Grantee whether Grantor will exercise its amendment rights as to franchise fees within a reasonable period of time of Grantee's giving notice of such other franchise terms or the date which Grantor could have exercised that right but in no event later than sixty (60) days from the date Grantee notified Grantor.

(B) It is the intent and agreement of Grantor and Grantee that Grantee shall not be required to pay Grantor a franchise fee under Section 6 of a percentage greater than that paid to Grantor by any other Electric Utility or Electric Energy Provider utilizing Grantor's Rights-of-Way on such Electric Utility's or Electric Energy Provider's revenues attributable to services that are the same or substantially the same as those performed by Grantee. It is further the intent and agreement of Grantor and Grantee that Grantee should not be placed at a competitive disadvantage by the payments required by Section 6 of this Ordinance in the event other Electric Utilities or Electric Energy Providers provide services in competition with Grantee without utilizing Grantor's Rights-of-Way.

(C) If Grantor imposes a lesser fee, or no fee, or is unable to impose a fee on another Electric Utility or Electric Energy Provider providing or seeking to provide services in competition with Grantee to customers within Grantor's municipal boundaries, whether utilizing Grantor's Rights-of-Way or not utilizing Grantor's Rights-of-Way, Grantee's fee under Section 6 for such services shall be automatically reduced to the lesser fee charged the other Electric Utility or Electric Energy Provider (or to zero, if no fee is charged such other Electric Utility or Electric Energy Provider). In all events, Town shall not grant more favorable treatment to other Electric Energy Providers than is granted to Company under this ordinance, it being the intent of the parties that no future provider of electric service, be it generation, transmission or distribution service, to customers within the corporate limits of Town shall be given a competitive advantage over Company.

(Ord. No. 10-09, § 7, 10-5-10)

Sec. 8. - Grantor rights in franchise.

The right is hereby reserved to the Town to adopt such regulations as it shall find necessary in the exercise of its police power, provided that such regulations, by ordinance or otherwise, shall be

reasonable, and shall not be in conflict with the laws of the State of Florida or the lawful regulations of any state agency possessing the power to regulate the activities of the Company, or conflict with or otherwise interfere with the benefits conferred on the Company hereunder. In the event of a conflict between this Franchise Agreement and any other ordinance or regulation adopted by the Town relating to Company's rights to perform work in and/or occupancy of the Rights-of-Way as permitted hereunder, the rights under this Franchise Agreement shall govern and control.

(Ord. No. 10-09, § 8, 10-5-10)

Sec. 9. - Work in rights-of-way.

The Company is hereby granted the right, authority and privilege to perform all necessary work and excavations in said Rights-of-Way of the Town related to its Facilities and necessary or incidental to carrying out such rights and obligations as permitted hereunder. The Company shall have the right to fasten and to stretch and lay along the lines of said poles, conduits, pipes and cables necessary for transmitting and conveying the electric current to be used in the Company's business, together with all the right and privileges necessary or convenient for the full use including the right to trim, cut and keep clear all trees and limbs near or along Company's Facilities that may in any way endanger the proper operation of same. Moreover, the Company shall have the right to construct, erect, operate and maintain within the Town an electric system consisting of its Facilities for carrying on the Company's business; provided that, in accomplishing these purposes, the streets of said Town shall not be unreasonably obstructed for an unreasonable amount of time and work in connection therewith shall be done and carried on in conformity with such reasonable rules, standards, regulations and local ordinances with reference thereto as may be adopted by the Town for the protection of the public and which are not in conflict with or otherwise interfere with the benefits conferred on the Company hereunder. Company will endeavor to notify City in advance of significant activities performed in Rights-of-Way. For significant emergency work performed in Rights-of-Way, Company will endeavor to notify the city in advance or as soon as reasonably possible after the work is performed. Notice will not be provided for maintenance activities.

(Ord. No. 10-09, § 9, 10-5-10)

Sec. 10. - Indemnification.

(A) The acceptance of this Franchise by Company shall be deemed an agreement on the part of Company to indemnify and hold the Town harmless against any and all direct damages, claims, losses, injuries or damages, including claims for equitable relief, arising out of the negligent act or omission, default, misconduct, or other wrongful act or omission of Grantee in the construction, operation, or maintenance of its electric utility facilities, expenses, reasonable attorneys' fees (including appellate fees) and costs that Town may incur to the extent arising out of or resulting from the negligence, default, or misconduct of Company, its contractors and agents in the construction, repair, operation, or maintenance of its electric utility Facilities hereunder. In no event shall Company be liable to Town for any consequential, incidental, punitive, exemplary, multiple, or indirect damages. This provision shall survive the termination of this franchise or the applicable statute of limitations so long as the event giving rise to the indemnity obligation occurred during the term of this Franchise.

(B) Company shall maintain throughout the term of this Franchise sufficient financial resources to provide self-insurance insuring Town and Company with regard to all damages set forth in Section 8(A) in the minimum amounts of:

(i) $1,000,000 for bodily injury or death to a person;

$3,000,000 for bodily injury or death resulting from any one accident.

(ii) $50,000 for property damage resulting from any one accident.

(iii) $1,000,000 for all other types of liability.

(C) Town acknowledges that Company provides its own liability insurance (self-insured). On an annual basis, Company must submit its annual audited financial report as documentation that clearly demonstrates that it has accumulated sufficient financial resources in order to provide insurance coverage as indicated in Section 8(B) above.

(Ord. No. 10-09, § 10, 10-5-10)

Sec. 11. - Records and reports.

(A) *Company Rules and Regulations.* The following records and reports shall be available to Town upon Town's reasonable request: copies of rules, regulations, terms and conditions adopted by Company that relate to Company's use of Town's Rights-of-Way. In addition, Grantee shall submit to the Town Clerk annually, Company's audited financial report upon Company's issuance of its audited financial report.

(B) *Accounting.* Company shall use the system of accounts and the form of books, accounts, records, and memoranda prescribed by the Florida Public Service Commission or such other applicable governing agency having jurisdiction over Company. Should the Florida Public Service Commission cease to exist, the Town retains the right to require the Company to maintain a system of accounts and forms of books and accounts and memoranda prescribed by the Federal Energy Regulatory Commission or any other applicable governing body having jurisdiction over the Company.

(C) *Reports.* Company will submit monthly a statement of its estimated Base Revenues for the period on which such payment is based, signed by an authorized representative of Grantee sufficient to show the source and method of computation of Base Revenues. The acceptance of any statement or payment shall not prevent or stop the Town from asserting that the amount paid is not the amount due, or from recovering any deficit by any lawful proceeding, including interest to be applied at the rate set forth in Section 6(B).

(D) *Availability of Records and Reports.* Company shall supply information that Town or its representatives may from time to time reasonably request relative to the calculation of franchise fees. Such financial records shall be kept and maintained in accordance with generally accepted accounting principles. Such records shall, on written request of Town, be open for examination and audit by Town and Town's representatives at Company's headquarters in St. Petersburg, Florida, during ordinary business hours and such records shall be retained by Company for a period of two (2) years.

(E) *Audit.* Town may require, upon prior written notice and during Company's normal business hours, an audit of Company's books related to this Franchise not more than once every five (5) years and then only for the preceding three years. Company will reimburse Town's audit costs if the audit identifies errors in Company's franchise Base Revenues of five percent (5%) or more for the period audited. If an underpayment of franchise fees has occurred due to the Company's error, interest will be calculated for each month of the underpayment period using the average monthly interest rate based on 30 day commercial paper.

Both the underpayment and interest shall be paid within ninety (90) days from completion of the audit.

(F) *Customer Report.* In addition to Town's obligations in Section 4(B), within 90 days of the Effective Date of this Agreement, Town shall provide to Company a report in a format acceptable to Company setting forth a listing of all addresses within the corporate limits of the Town and annually thereafter a report identifying any changes to the address listing provided the previous year.

(Ord. No. 10-09, § 11, 10-5-10)

Sec. 12. - Retail wheeling.

In the event the appropriate governmental authorities authorize Retail Wheeling, then either party, if Adversely Affected thereby, may reopen this ordinance upon thirty (30) days written notice to the other for the sole purpose of addressing the Franchise Fee payments between The Company and The Town. If the parties are unable to agree within ninety (90) days of reopening, either party may declare an impasse and may file an action in the Circuit Court in Pinellas County, Florida for declaratory relief as to the proper Franchise Fee in light of Retail Wheeling.

(Ord. No. 10-09, § 12, 10-5-10)

Sec. 13. - Severability.

Should any section or provision of this Franchise ordinance or any portion thereof, the deletion of which would not adversely affect the receipt of any material benefits or, substantially increase the burden of any party hereunder, be declared by a court of competent jurisdiction to be invalid, such decision shall not affect the validity of the remainder, as a whole or any part thereof, other than the part declared to be invalid. In the event of any such partial invalidity, Town and Company shall meet and negotiate in good faith to obtain a replacement provision that is in compliance with the judicial authority's decision.

(Ord. No. 10-09, § 13, 10-5-10)

Sec. 14. - Governing law and venue.

(A) This Franchise ordinance shall be construed and interpreted according to the laws of the State of Florida.

(B) In the event that any legal proceeding is brought to enforce the terms of this Franchise, the same shall be brought in Pinellas County, Florida, or, if a federal claim, in the U.S. District Court in and for the Middle District of Florida, Tampa Division.

(Ord. No. 10-09, § 14, 10-5-10)

Sec. 15. - Merger.

This Franchise agreement is the full, complete and entire understanding and agreements of the parties as to its subject matter, and the written terms supersede all prior contemporaneous representations, discussions, negotiations, understanding and agreements relating to the subject matter of this agreement. The parties shall not be bound or liable for any statement, prior negotiations, correspondence, representation, promise, draft agreements, inducements, or other understanding of any kind or nature not set forth or provided herein.

(Ord. No. 10-09, § 15, 10-5-10)

Sec. 16. - Notices.

Except in exigent circumstances, all notices by either Town or Company to the other shall be made by depositing such notice in the United States Mail, Certified Mail return receipt requested or by recognized commercial delivery, e.g. FedEx, UPS or DHL or facsimile. Any notice served by certified mail return receipt shall be deemed delivered five (5) days after the date of such deposit in the United States mail unless otherwise provided. Any notice given by facsimile is deemed received by next Business Day. "Business Day" for purposes of this section shall mean Monday through Friday, with Saturday, Sunday and Town and Company observed holidays excepted. All notices shall be addressed as follows:

To Town:

Town Clerk
105 164th Avenue
Redington Beach, FL 33708
Phone: (727)391-3875
Facsimile No.: (727)397-6911

To Company:

External Relations Department
Progress Energy Services Company, LLC
P.O. Box 14042
St. Petersburg, FL 33733-4042
Facsimile No.: (727) 820-5715

Notice shall be provided as required by this Franchise to the above-named addressees unless directed otherwise in writing by Grantor or Grantee.

(Ord. No. 10-09, § 16, 10-5-10)

Sec. 17. - Non-waiver provision.

The failure of either party to insist in any one or more instances upon the strict performance of any one or more of the terms or provisions of this Franchise shall not be construed as a waiver or relinquishment for the future of any such term or provision, and the same shall continue in full force and effect. No waiver or relinquishment shall be deemed to have been made by either party unless said waiver or relinquishment is in writing and signed by the parties.

(Ord. No. 10-09, § 17, 10-5-10)

Sec. 18. - Repealer and superseding provision.

This ordinance shall supersede, as to the rights, privileges and obligations between Town and Company, all ordinances and parts of ordinances in conflict with the terms of this ordinance. Ordinance Documentary No. 01-02 and any amendments thereto, are hereby deemed null and void and/or repealed upon the effective date of this ordinance, and none of the provisions of such repealed Ordinance Documentary No. 01-02 and any amendments thereto shall have any further force and effect.

(Ord. No. 10-09, § 18, 10-5-10)

Sec. 19. - Dispute resolution.

The parties to this Franchise agree that it is in each of their respective best interests to avoid costly litigation as a means of resolving disputes which may arise hereunder. Accordingly, the parties agree that prior to pursuing their available legal remedies, they will meet in an attempt to resolve any differences. If such informal effort is unsuccessful, then the Parties may exercise any of their available legal remedies.

(Ord. No. 10-09, § 19, 10-5-10)

Sec. 20. - Assignment.

Grantee shall not lease, assign, or otherwise alienate this Franchise or the rights granted hereunder without the consent of the Grantor's Town Board of Commissioners expressed by ordinance, provided, however this prohibition shall not apply to the extent Company undergoes a name change, merger or

acquisition or in the event Company chooses to assign to any of its affiliates, subsidiaries, or parent company.

(Ord. No. 10-09, § 20, 10-5-10)

ATTACHMENT E
OLD CODE/NEW CODE REFERENCES

TOWN OF REDINGTON BEACH
RIGHT-OF-WAY UTILIZATION ORDINANCE REWRITE
CODE SECTION COMPARISONS

Current Section	Provision	New Section
19.1	Obstructions	19-2
19.2 (a)	Digging	19-3, 19-5
19-2 (b)	Application Requirements	19-3 (b)
19-2 (b)	Major project defined	19-1 (e)
19-2 (b)	Approval of a major project	19-3 (b) (3)
19-2 (c)	Jack and bore construction required	19-5 (a)
19-2 (d) (1)	Jack and bore standards	19-5 (b) (1)
19-2 (d) (2)	Traffic maintenance	19-5 (c)
19-2 (d) (3)	Minimum depth of casing	19-5 (b) (5)
19-2 (e)	Cut and fill permitted by Town Board	19-5 (a)
19-2 (f)	Emergency exception	19-4
19-2 (g)	Restoration required	19-6 (a)
19-2 (h)	Fail to cure	19-6
19-2 (I)	Specific deficiencies	19-5 (b)
19-2 (j)	Contents of notice to cure	19-6 (c)

Meeting Date: January 2,, 2019
ADVERTISED PUBLIC HEARING
Agenda Item ___.

FLORIDA MUNICIPAL SERVICES
18001 Gulf Blvd.
Redington Shores, FL 33708
(727) 202-6825

December 27, 2018

MEMORANDUM

TO: Honorable Mayor and Members of the Town Board of Commissioners

FROM: Darin Cushing, CBO, CFM, Building Official
R. Bruce McLaughlin, AICP, MCIP, Town Planner

SUBJECT: Construction Activity Regulation: Ordinance 2018-10

EXECUTIVE SUMMARY

The Planning Board has considered if amending the days and hours permitted for construction activity would be appropriate. Staff and the LPA have reviewed related issues and the regulations of the other Beach municipalities, and recommend adjustment of the permitted days and hours for construction and recommend additional limits on construction equipment. The Board adopted the Ordinance on first reading on 12/5/18. Staff and the LPA **RECOMMEND ADOPTION ON SECOND AND FINAL READING OF THE ATTACHED ORDINANCE SUBJECT TO COMMENTS THAT MAY BE RECEIVED AT THE PUBLIC HEARING.**

BACKGROUND

Applicant: Town of Redington Beach

Location: Entire Town

THE REQUEST

The Planning Board, responding to a member's question, discussed whether the Town's current regulation of construction activity:

> Sec. 12-91. - Construction activities.
>
> The erection, including excavating, demolition, alteration or repair of any building other than between the hours of 7:00 a.m. and 6:00 p.m. on weekdays is prohibited, except in case of urgent necessity in the interest of public health and safety, and then only with a permit from the building official, which permit may be granted for a period not to exceed three days while the emergency continues. If the building official should determine that the public health and safety will not be impaired by the erection, demolition, alteration or repair of any building or the excavation of streets and highways within the hours of 6:00 p.m. and 7:00 a.m., and if he shall further determine that loss or inconvenience would result to any party in interest, he may grant permission for such work to be done within the hours of 6:00 p.m. and 7:00 a.m., upon application being made at the time the permit for the work is awarded or during the progress of the work.

remains appropriate.

In summary, construction work:

- Must be done
  - On a weekday
  - Between 7.00 a.m. and 6.00 p.m.

- Work may be done
  - On holidays if the holiday falls on a weekday.

The following questions are presented by the existing regulation:

- Should work be permitted on Saturdays?

- Should work be prohibited on holidays?
- Should there be any type of work permitted on Sundays?
- Should there be additional regulation of construction equipment as is found in many Beach municipalities?

HISTORY

Ordinance 2018-10 was found to be consistent with the Town's Comprehensive Plan and recommended for approval by the Planning Board on October 30, 2018. The Ordinance was adopted on first reading on December 5, 2018.

As presented to the Town Board for first reading, there was a discrepancy between the title of the the proposed ordinance which contemplated the insertion of four subsections to the Code, and the body of rhe ordinance which presented the text as sub-subsections. Because of the nature of the regulations ad the somewhat disparate topics covered by each regulation, staff recommends adopting the ordinance with subsections not sub-subsections, and have formatted the attached final draft of the ordinance accordingly.

NOTICE

The Town Clerk's office will advise as to the notice given of this proceeding.

AUTHORITY

Pursuant to §§ 4 and 5 of the Town Charter, the Town is governed by the Board of Commissioners which may exercise all powers available to a municipality under the Constitution and laws of the State of Florida. Those powers include preparing, adopting and amending land development regulations, including the regulation of construction activities.

COMPREHENSIVE PLAN CONSISTENCY

Based on the consideration that has gone into the development of the ordinance by Staff and by the Planning Board, the proposed Ordinance is consistent with the following Objective and Policies of the Town of Redington Beach Comprehensive Plan:

Objective 1.1
The integrity and quality of life, as exhibited by the continued maintenance of the town's family oriented, residential character, will be maintained in existing residential areas and neighborhoods.

Policy 1.1.1.
Protect existing residential areas from the encroachment of incompatible activities; likewise, other land use areas shall be protected from the encroachment of incompatible residential activities.

Although the proposed ordinance permits construction activities for a limited period of time on Saturdays, it prohibits construction activity on statutory holidays. The careful thought that has gone into this Ordinance, and the experiences of other Beach municipalities, has shown that the somewhat extended hours, and the prohibition of work on holidays, will facilitate maintaining the integrity and quality of life of the town's residential character, and will protect the Town's residential areas from incompatible construction activities. The same is true of permitting owner-builders to work on Sundays, a prohibition that is difficult to enforce.

ANALYSIS

Regulation of Days and Times

The Table on the following page shows the regulations of the other Beach municipalities. Redington Beach is the only municipality to prohibit work on Saturdays. Six of the 10 municipalities on the Beach, including Redington Beach, permit work on some holidays. Work covered by the regulation includes everything from the construction of a new home to minor home repairs costing $1,000 or more. Permits are not required for "[wall] papering, restoration of plastering, painting or similar maintenance or restoration work." [1]

Staff also conducted an online literature review of laws, regulations and codes and of news items from around the country to further identify issues that should be taken into consideration during the Board's deliberations on this topic.

---

[1] Town Code, § 6-77.

PINELLAS COUNTY BEACH MUNICIPALITIES
CONSTRUCTION REGULATIONS

Const Rules
09/07/18

	Days Work Permitted			Permitted				
	Sat.	Sun.	Hol.	M-F Hours	Sat Hours	Prop Own Exc	Other Noise	Code Sec
Bellear Beach	✓	X	X [1]	7.00 - 6.00	7.00 - 6.00	✓ [2]	✓ [3]	10-2
Belleair Shore	?	X	X [1]	7.00 - 6.00	7.00 - 6.00	X	X	18-71
Indian Rocks Beach	✓	X	✓ [16]	7.00 - 6.00	7.00 - 6.00	X	X	26-35
Indian Shores	✓	X	X [5]	8.00 - 6.00	8.00 - 6.00	✓ [4]	X	18-1
Redington Shores	✓	X	✓ [16]	7.00 - 6.00	7.00 - 6.00	X	✓ [14]	101-1
North Redington Beach	✓	X	X [6]	8.00 - 6.00	8.00 - 6.00	✓ [7]	✓ [15]	18-58
Redington Beach	X	X	✓ [8]	7.00 - 6.00	X	X	✓ [9]	12-91
Madeira Beach	✓	X	✓ [16]	7.30 - 10.00	7.30 - 10.00	X	✓ [10]	34-87
Treasure Island	✓	X	✓ [16]	7.00 - 6.00	7.00 - 6.00	X	✓ [11]	18-73
St. Pete Beach	✓	X [13]	✓ [16]	7.30 - 6.00	1.3	X	✓ [12]	98-1

Code
✓ Permitted
X Prohibited
? Not stated

[1] New Years Day, Memorial Day, July 4, Labor Day, Thanksgiving, Christmas
[2] Compliance with noise and nuisance standards required
[3] § 22-61 (a) (6): Construction equipment may not be louder than its design specification.
[4] § 18-2: provided that no noise is generated
[5] New Years Day, Memorial Day, July 4, Labor Day, Veterans' Day, Thanksgiving, Christmas
[6] Thanksgiving and Christmas Only
[7] Limited "minor repairs and alterations"
[8] Weekdays only
[9] § 12-95 imposes additional limitations on construction equipment
[10] § 34-87 also imposes additional limitations on construction equipment
[11] § 18-73 also imposes additional limitations on construction equipment
[12] § 46-133 imposes additional limitations on construction equipment
[13] City Manager may grant exceptions for home repairs and remodeling
[14] § 101-2 imposes additional limitations on construction equipment
[15] § 30-31 imposes additional limitations on construction equipment
[16] Except Sundays

Prohibiting work on weekends enhances the quiet enjoyment of nearby properties, limits noise and disruption over the weekend, enhances the ambiance of the Town over the weekend, and avoids practical difficulties related to required inspections, identifying unpermitted work, and identifying unlicensed contractors. Prohibiting work on weekends hinders owner-builders doing their own work and may also be detrimental to contractors' schedules, particularly at peak times or at times of weather delays in construction.

Beyond noise, construction at any time can lead to issues of blocked roads and sidewalks, traffic beyond the immediate building site, damage to adjacent properties, vibration, dust and particulate pollution, and potential interruption of utility services. These adverse impacts should be avoided whenever possible but such avoidance is even more important at times when there is a reasonable expectation of the even greater quiet enjoyment of nearby properties: on evenings, weekends and holidays.

Another problem with permitting weekend and after-hours work is enforcement. Although the Town has relatively strong controls over work for which permits are issued, unpermitted work is more likely to escape enforcement action if done in the evenings, or on weekends or holidays. While the absence of a permit is, in and of itself, a violation, other violations resulting from the unpermitted work are likely to be exacerbated.

On weekends and after hours, initial enforcement lies with the PCSO deputies patrolling the Town. During most of the hours in which construction is presently permitted, the Building Official and his staff spend a varying amount of time on the Town's roads and use their observations to identify problematic situations. This resource is generally not available in the evenings or on weekends.

In the evenings and on weekends, if the deputies observe problematic activity, they e-mail the Building Department with the relevant information and the Department follows up the next work day. Thus, the enforcement process in the evenings and on weekends creates the potential for unpermitted and unlawful work to progress further without impediment, thereby requiring greater remedial works.

The Planning Board recommended that work should be permitted on Saturdays, but within the more limited time period of 9.00 a.m. to 3.00 p.m. and that construction should be prohibited on

all holidays, to achieve consistency with other business and governmental practices. Identified holidays should as establish by the Federal Office of Personnel Management. [2]

Additional Regulation of Heavy Equipment

Several of the Beach municipalities, particularly at the south end of the Beach, impose additional regulation on the use of heavy equipment in construction. A sample of such legislation reads:

> (2) Pile drivers, etc. The operation between the hours of 10:00 p.m. and 7:30 a.m. Monday through Saturday or at any time on Sunday, of any pile driver, steam shovel, pneumatic hammer, derrick, dredge, steam or electric hoist or other appliance, the use of which is attended by loud and raucous noise [is prohibited]. [3]

This regulation is arguably subsumed into the Town's existing regulations and as said regulations may be amended. However, specificity is always a good idea in law and language similar to that found in the Madeira Beach Code could be useful in the Redington Beach Code.

RECOMMENDATION

Staff recommends **ADOPTION ON SECOND AND FINAL READING OF THE ATTACHED ORDINANCE SUBJECT TO COMMENTS THAT MAY BE RECEIVED AT THE PUBLIC HEARING.**

DC/RBMcL/m

---

[2] Currently, New Year's Day (January 1), Birthday of Martin Luther King, Jr. (Third Monday in January), Washington's Birthday (Third Monday in February), Memorial Day (Last Monday in May), Independence Day (July 4), Labor Day (First Monday in September), Columbus Day (Second Monday in October), Veterans Day (November 11), Thanksgiving Day (Fourth Thursday in November), and Christmas Day (December 25). See https://www.opm.gov/faqs/QA.aspx?fid=e64d74ab-20a3-484c-8682-d2a2b46c22da&pid=c41e6beb-0c14-449d-bde5-355a3a3014cd

[3] City of Madeira Beach Code, § 34-87(2).

TOWN OF REDINGTON BEACH
ORDINANCE 2018-10

AN ORDINANCE OF THE TOWN OF REDINGTON BEACH, PINELLAS COUNTY FLORIDA, REPEALING SECTION 12.91 OF ARTICLE IV OF CHAPTER 12 OF THE TOWN CODE REGULATING CONSTRUCTION NOISE; AND AMENDING CHAPTER 6, ARTICLE III, BUILDINGS AND BUILDING REGULATIONS, OF THE TOWN CODE BY INSERTING SECTIONS 6-68, 6-69, 6-70, AND 6-71 REGULATING THE HOURS AND DAYS DURING WHICH CONSTRUCTION MAY OCCUR IN THE TOWN; PERMITTING CONSTRUCTION ACTIVITIES ON SATURDAYS BETWEEN THE HOURS OF 9.00 A.M. AND 3.00 P.M.; PERMITTING OWNER/BUILDERS TO UNDERTAKE CERTAIN INTERIOR CONSTRUCTION ACTIVITIES ON SUNDAYS; PROHIBITING CONSTRUCTION ACTIVITIES ON DESIGNATED FEDERAL HOLIDAYS; FURTHER REGULATING THE USE OF HEAVY EQUIPMENT IN CONSTRUCTION ACTIVITIES; PROVIDING FOR EXCEPTIONS TO THE DAYS AND HOURS DURING WHICH CONSTRUCTION MAY OCCUR WHEN SUCH EXCEPTION WILL NOT IMPAIR THE PUBLIC HEALTH AND SAFETY AND IS IN THE PUBLIC INTEREST; PROVIDING FOR SEVERABILITY; AND ESTABLISHING AN EFFECTIVE DATE.

WHEREAS, the Board of Commissioners of the Town of Redington Beach desires to regulate the hours construction can be conducted with the jurisdictional limits of the Town; and

WHEREAS, the Board of Commissioners of the Town of Redington Beach finds that such regulation is in the best interests of the public health, safety and welfare; and

WHEREAS, the Board of Commissioners of the Town of Redington Beach has determined that the repeal of Section 12.91 – Construction activities and the amendment of Chapter 6, Article III, Division 1 are necessary to effectively regulate same; and

WHEREAS, the Town's Planning Board, which serves as its Local Planning Agency, has found this Ordinance to be consistent with the Comprehensive Plan and recommended approval of the amendment to further consistency with the Town's Comprehensive Plan;

NOW, THEREFORE BE IT ORDAINED by the Board of Commissioners of the Town of Redington Beach, Florida, that:

Section 1. The foregoing whereas clauses are incorporated herein by reference and made a part hereof.

Section 2. Chapter 12 - Nuisances, Article IV - Noise, Section 12.91 – Construction activities is hereby repealed in its entirety and the section is reserved for future use.

Section 3. Chapter 6 – Buildings and Building Regulations, Article III – Building Code, Division 1 – Generally, is amended by the addition of Sections 6-68 – Construction hours; 6-69 – Work on holidays prohibited; 6-70 – Heavy equipment; and 6-71 – Exceptions; as follows:

Sec. 6.68 – Construction hours.

The erection, including excavating, demolition, alteration or repair of any building other than between the hours of 7:00 a.m. and 6:00 p.m. on weekdays and between the hours of 9.00 a.m. and 3.00 p.m. on Saturdays, is prohibited, except in case of urgent necessity in the interest of public health and safety, and then only with a permit from the building official, which permit may be granted for a period not to exceed three days while the emergency continues. Notwithstanding the forgoing, an owner-builder who is granted a building permit pursuant to Section 489.103 (7)(a), Florida Statutes, may work on Sundays, in the interior of the building only, between the hours of 9.00 a.m. and 3.00 p.m. provided that there are no external indicators (noise, vibration, smoke, dust, or odor) of such work, and further provided that no subcontractors are present on the premises on any Sunday.

Sec. 6-69 – Work on holidays prohibited.

The erection, including excavating, demolition, alteration or repair of any building on the following statutory holidays is prohibited: New Year's Day (January 1), Birthday of Martin Luther King, Jr. (Third Monday in January), Washington's Birthday (Third Monday in February), Memorial Day (Last Monday in May), Independence Day (July 4), Labor Day (First Monday in September), Columbus Day (Second Monday in October), Veterans Day (November 11), Thanksgiving Day (Fourth Thursday in November), and Christmas Day (December 25).

Sec. 6-70 – Heavy Equipment.

The operation of heavy equipment, to include but not limited to: pile drivers, steam shovels, pneumatic hammers, derricks, dredges, steam or electric hoists or other appliance, the use of which is attended by loud and raucous noise is prohibited at all hours other than those permitted by sections 6-68 and 6-69.

Sec. 6-71 - Exceptions.

If the building official should determine that the public health and safety will not be impaired by the erection, demolition, alteration or repair of any building or the excavation of streets and highways on days or at times other than those permitted by Sections 6-68 and 6-69, and if he shall further determine that loss or inconvenience would result to any party in interest, he may grant permission for such work to be done on an otherwise prohibited day or at an otherwise prohibited time, upon application being made at the time the permit for the work is awarded or during the progress of the work.

Section 4. If any section, subsection, sentence, clause, provision or word of this Ordinance is held unconstitutional or otherwise legally invalid, same shall be severable and the remainder of this Ordinance shall not be affected by such invalidity, such that any remainder of the Ordinance shall withstand any severed provision, as the Board of Commissioners would have adopted the Ordinance and its regulatory scheme even absent the invalid part.

Section 5. This Ordinance shall become effective immediately upon final passage and adoption.

PASSED AND ADOPTED by the Board of Commissioners of the Town of Redington Beach, Pinellas

ATTEST:

Missy Clarke, CMC Town Clerk

Nick Simons, Mayor

	Motion	Seconded	Aye	Nay	Absent
Commissioner Kornijtschuk					
Commissioner Dorgan					
Commissioner Steiermann					
Vice Mayor Will					
Mayor Simons					

Meeting Date: January 2, 2019
ADVERTISED PUBLIC HEARING
Agenda Item ____

FLORIDA MUNICIPAL SERVICES
18001 Gulf Blvd.
Redington Shores, FL 33708
(727) 202-6825

December 27 2018

MEMORANDUM

TO: Honorable Mayor and Members of the Town Board of Commissioners

FROM: Darin Cushing, CBO, CFM, Building Official
R. Bruce McLaughlin, AICP, MCIP, Town Planner

SUBJECT: Correction of Scrivener's Error and Definition of "Engineer of Record"
Ordinance 2018-12

Proposed Ordinances 2018-01, Seawalls; 2018-02, Docks; 2018-04, Pool/Seawall Separation; and 2018-05, Right-of-Way Utilization and Driveway Connection Requirements, all place considerable design responsibility on an applicant's "engineer of record." These ordinances recognize that the Florida licensed engineer of record has substantial ethical, professional and financial liabilities associated with the design of the subject construction and is not going to jeopardize his or her professional standing with shoddy work.

However, the term "engineer of record" is not presently defined in the Town Code, although it is defined in the Florida Administrative Code, (FAC). It is preferable to include a definition of the term in the Town Code and to do so once rather than four different times.

Accordingly, proposed Ordinance 2018-12 defines the term "engineer of record," based on the existing FAC definition and inserts the definition in section 10-10 of the Town Code, a section of definitions applicable to most land development regulations in the Town.

In the course of preparing Ordinance 2018-12, a scrivener's error in section 6-125, incorporating general definitions into the Town's Building Code provisions, was discovered. Ordinance 2018-12 corrects this scrivener's error.

December 27 2018

The Planning Board consider Ordinance 2018-12 at its public meeting on December 4, 2018 and recommended its approval (no finding of consistency with the Town's Comprehensive Plan was required). The Town Board adopted the Ordinance on first reading on December 5, 2018.

Staff recommends **ADOPTION ON SECOND AND FINAL READING OF THE ATTACHED ORDINANCE SUBJECT TO COMMENTS THAT MAY BE RECEIVED AT THE PUBLIC HEARING.**

DC/RBMcL/m

TOWN OF REDINGTON BEACH
ORDINANCE 2018-12

AN ORDINANCE OF THE TOWN OF REDINGTON BEACH, PINELLAS COUNTY, FLORIDA, AMENDING SECTION 6-125 OF THE TOWN CODE BY CORRECTING A SCRIVENER'S ERROR AND AMENDING SECTION 10-10 OF THE TOWN CODE BY INSERTING A DEFINITION OF "ENGINEER OF RECORD," PROVIDING FOR SEVERABILITY AND ESTABLISHING AN EFFECTIVE DATE.

WHEREAS, the Board of Commissioners of the Town of Redington Beach desires to more effectively regulate development and construction within the Town, especially as it relates to the construction of seawalls, docks, swimming pools and driveway connections and also desires to more effectively regulate the private use of Town rights-of-way; and

WHEREAS, the Board of Commissioners of the Town of Redington Beach finds that such regulation is in the best interests of the public health, safety and welfare; and

WHEREAS, the Board of Commissioners of the Town of Redington Beach has determined that such regulations require the involvement of an "engineer of record," a term which requires definition, and

WHEREAS, the Town's Planning Board, which serves as its Local Planning Agency, has recommended approval of amendments to the Town's land development regulations with respect to the construction of seawalls, docks, swimming pools and driveway connections and the more effective regulation of the private use of Town rights-of-way; to further consistency with the Town's Comprehensive Plan; and

WHEREAS, the Town's Planning Board has recommended approval of this Ordinance;

WHEREAS a scrivener's error was found in the course of preparing the amendments to the land development regulations described herein; and

WHEREAS, the Town Board wishes to implement the recommendations of the Planning Board.

NOW, THEREFORE BE IT ORDAINED by the Board of Commissioners of the Town of Redington Beach, Florida, that:

Section 1. The foregoing whereas clauses are incorporated herein by reference and made a part of hereof.

Section 2. Section 6-125 of the Town Code of the Town of Redington Beach is amended to read:

> The words, terms and phrases, when used in this article, shall have the meanings ascribed to them in section ~~10-1~~ 10-10 of this Code, except where the context clearly indicates a different meaning.

Section 3. Section 10-10 of the Town Code of the Town of Redington Beach is amended by the insertion in alphabetical order of a definition of the term: "Engineer of record," which definition reads:

> Engineer of Record. A licensed Florida professional engineer who is in responsible charge for the preparation, signing, dating, sealing and issuing of any engineering document(s) for any engineering service or creative work.

Section 4. If any section, subsection, sentence, clause, provision or word of this Ordinance is held unconstitutional or otherwise legally invalid, same shall be severable and the remainder of this Ordinance shall not be affected by such invalidity, such that any remainder of the Ordinance shall withstand any severed provision, as the Board of Commissioners would have adopted the Ordinance and its regulatory scheme even absent the invalid part.

Section 5. This Ordinance shall become effective immediately upon final passage and adoption.

PASSED AND ADOPTED by the Board of Commissioners of the Town of Redington Beach, Pinellas County, Florida, on this _____ Day of _____ 201__.

ATTEST:

_____ _____

Missy Clarke, CMC Town Clerk Nick Simons, Mayor

	Motion	Seconded	Aye	Nay	Absent
Commissioner Kornijtschuk					
Commissioner Dorgan					
Commissioner Steiermann					
Vice Mayor Will					
Mayor Simons					

TOWN OF REDINGTON BEACH
BOARD OF COMMISSIONERS MEETING CALENDAR
2018 REGULAR MEETINGS

Town Hall
1ST & 3RD WEDNESDAY of the Month
6:30 p.m.

JANUARY	**2nd**	**16th**
FEBRUARY	**6th**	**20th**
MARCH	**6th**	**20th**
APRIL	**3rd**	**17th**
MAY	**1st**	**15th**
JUNE	**5th**	**19th**
JULY	**3rd**	**17th**
AUGUST	**7th**	**21st**
SEPTEMBER	**4TH**	**18TH**
OCTOBER	**2nd**	**16TH**
NOVEMBER	**6TH**	**20th**
DECEMBER	**4TH**	**18TH**

NOTE: **No meetings posted for Holidays or Election Days.**
Workshop and Special Meetings may be called as needed.

ALL MEETING SHALL FOLLOW THE STATE OF FLORIDA SUNSHINE LAW GUIDELINES.

Missy Clarke, CMC
Town Clerk

TOWN OF REDINGTON BEACH

Resolution 2019-01

A RESOLUTION OF THE BOARD OF COMMISSIONERS OF THE TOWN OF REDINGTON BEACH, FLORIDA, ESTABLISHING THE DATES FOR TOWN REGULAR COMMISSION MEETINGS FOR CALENDAR YEAR 2019, AND PROVIDING FOR AN EFFECTIVE DATE

WHEREAS, a schedule of Regular monthly meetings of the Town's Board of Commissioners for each calendar year has, in the past, been adopted by Resolution; and

WHEREAS, a schedule of such meetings for calendar year 2019, has not yet been adopted;

NOW, THEREFORE, BE IT RESOLVED BY THE BOARD OF COMMISSIONERS OF THE TOWN OF REDINGTON BEACH, FLORIDA AS FOLLOWS:

Section 1: The Board of Commissioners of the Town of Redington Beach does hereby adopt a form schedule of Regular Commission Meetings as set forth in the Attached Exhibit "A" to this Resolution which is incorporated herein by this reference.

Section 2: All such meetings, unless otherwise timely noticed, shall commence at 6:30 p.m., and that the location where such meetings shall be held shall be in the Town Hall Assembly Hall at 105 164th Avenue, Redington Beach, Florida, and in accordance with the Sunshine Law of the State of Florida, a copy of this Resolution shall, upon adoption:

1. Be posted on the "Official/Legal Notices" Bulletin Board at Town Hall;
2. Be filed with the Town Clerk; and
3. Be mailed to any resident or non-resident who requests a copy of such Resolution and/or Schedule of Meetings (i.e. Exhibit A to this Resolution).

Section 3: This Resolution, 2019-01, shall become effective immediately upon its adoption.

PASSED BY THE BOARD OF COMMISSIONERS OF THE TOWN OF REDINGTON BEACH, FLORIDA, IN REGULATION SESSION THIS 2nd Day of January, 2019.

Attest:

By: _____
Missy Clarke, CMC, Town Clerk

By: _____
Nick Simons, Mayor

	Motion	Second	Aye	Nay	Absent
Commissioner Dorgan					
Commissioner Kornijtschuk					
Commissioner Steiermann					
Vice Mayor Will					
Mayor Simons					

TOWN OF REDINGTON BEACH
BOARD OF COMMISSIONERS MEETING CALENDAR
2018 REGULAR MEETINGS

Town Hall
1ST & 3RD WEDNESDAY of the Month
6:30 p.m.

JANUARY	**2nd**	**16th**
FEBRUARY	**6th**	**20th**
MARCH	**6th**	**20th**
APRIL	**3rd**	**17th**
MAY	**1st**	**15th**
JUNE	**5th**	**19th**
JULY	**3rd**	**17th**
AUGUST	**7th**	**21st**
SEPTEMBER	**4TH**	**18TH**
OCTOBER	**2nd**	**16TH**
NOVEMBER	**6TH**	**20th**
DECEMBER	**4TH**	**18TH**

NOTE: **No meetings posted for Holidays or Election Days.**
Workshop and Special Meetings may be called as needed.

ALL MEETING SHALL FOLLOW THE STATE OF FLORIDA SUNSHINE LAW GUIDELINES.

Missy Clarke, CMC
Town Clerk