Town of Prospect
BUILDING DEPARTMENT

RESIDENTIAL WOOD DECK CONSTRUCTION GUIDE

This document contains relevant code requirements for constructing, enlarging, or altering residential wood decks. It does NOT cover all aspects of the code nor does the Building Department accept responsibility for errors or omissions. The actual language of the Connecticut State Building Code always prevails.

Effective October 1, 2022

Town of Prospect, Connecticut

Seth Flynn
Building Official
(203) 758-4461
building@townofprospect.org

IMPORTANT INFORMATION

Inspection Requests

- It shall be the duty of the holder of the building permit or their duly authorized agent to notify the building official when work is ready for inspection. It shall be the duty of the permit holder to provide access to and means for inspections of such work that are required by this code.

Required Inspections

- Pier/footing excavations before placing concrete [Photographs not accepted]
    - Helical piers require a certified report immediately after installation
- Rough framing [Includes ledger and flashing]
- Final inspection [Stairs and guards must all be completed]

Approval Required

- Work shall not be done beyond the point indicated in each successive inspection without first obtaining the approval of the building official. The building official, upon notification, shall make the requested inspections and shall either indicate the portion of the construction that is satisfactory as completed, or notify the permit holder or the permit holder's agent wherein the same fails to comply with this code. Any portions that do not comply shall be corrected and such portion shall not be covered or concealed until authorized by the building official.

RESIDENTIAL WOOD DECK CONSTRUCTION GUIDE

Based on the 2021 International Residential Code portion of the 2022 Connecticut State Building Code

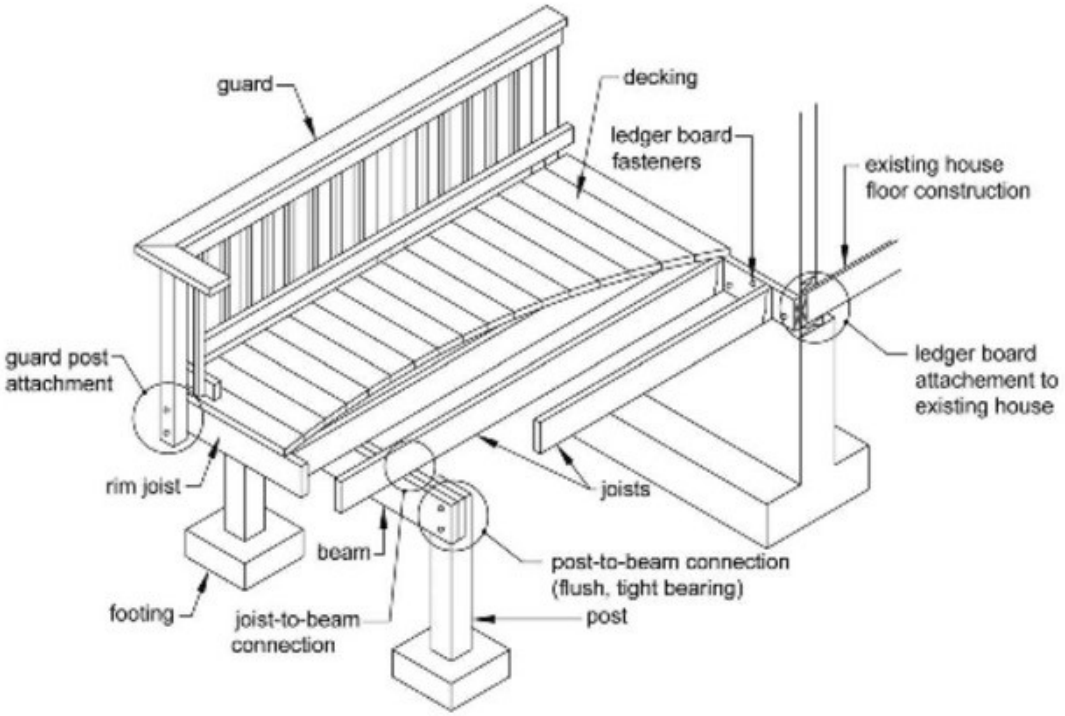

Where applicable, provisions and details contained in this document are based on the 2021 *International Residential Code* (IRC) portion of the 2022 Connecticut State Building Code. Prescriptive construction methods shown or described are intended to meet or exceed IRC requirement. Provisions not addressed in the IRC are referenced as "good industry practice" according to the American Wood Council. Where differences exist between this document and the IRC, the IRC shall govern. All construction and materials shall conform to the IRC, as determined by the Southington Building Department. In the event of any questions, please contact the Southington Building Department.

IRC REQUIREMENTS FOR WOOD DECKS

Section R105 Permits

R105.1 Required. Any owner or owner's authorized agent who intends to construct, enlarge, alter, repair, move, demolish or change the occupancy of a building or structure, or to move a lot line that will affect any existing building or structure, or to erect, install, enlarge, alter, repair, remove, convert or replace any electrical, gas, mechanical or plumbing system, the installation of which is regulated by this code, or to cause any such work to be performed, shall first make application to the building official and obtain the required permit.

R105.1.1 By Whom Application Is Made. Pursuant to section 29-263 of the Connecticut General Statutes, application for a permit shall be made by the owner or by an authorized agent. If the authorized agent is a contractor, such contractor shall follow the provisions of section 20-338b of the Connecticut General Statutes. The applicant shall include the full names and addresses of the owner, agent and the responsible officers, if the owner or agent is a corporate body.

R105.3 Application for Permit. To obtain a permit, the applicant shall first file an application therefor in writing on a form furnished by the department of building safety for that purpose. Such application shall:

1. Identify and describe the work to be covered by the permit for which application is made.
2. Describe the land on which the proposed work is to be done by legal description, street address or similar description that will readily identify and definitely locate the proposed building or work.
3. Indicate the use and occupancy for which the proposed work is intended.
4. Be accompanied by construction documents and other information as required in Section R106.1.
5. State the valuation of the proposed work.
6. Be signed by the applicant or the applicant's authorized agent.
7. Give such other data and information as required by the building official.

R105.3.1.2 Zoning Approval. Pursuant to subsection (f) of section 8-3 of the Connecticut General Statutes, no building permit shall be issued, in whole or in part, for a building, use or structure subject to the zoning regulations of a municipality without certification in writing by the official charged with the enforcement of such regulations that such building, use or structure is in conformity with such regulations or is a valid nonconforming use under such regulations.

NOTE: The Zoning Department is separate from the Building Department. It is the property owner's or applicant's responsibility to obtain zoning approval prior to submitting an application for a building permit.

Section R106 Construction Documents

R106.1 Submittal Documents. Submittal documents consisting of construction documents, and other data shall be submitted in two or more sets, or in a digital format where allowed by the building official, with each application for a permit. The construction documents shall be prepared by a registered design professional where required by the statutes of the jurisdiction in which the project is to be constructed. Where special conditions exist, the building official is authorized to require additional construction documents to be prepared by a registered design professional.

R106.1.1 Information on Construction Documents. Construction documents shall be drawn upon suitable material. Electronic media documents are permitted to be submitted where approved by the building official. Construction documents shall be of sufficient clarity to indicate the location, nature and extent of

the work proposed and show in detail that it will conform to the provisions of this code and relevant laws, ordinances, rules and regulations, as determined by the building official. When the quality or arrangement of materials is essential for conformity to this code, specific information shall be given to establish such quality or arrangement, and this code shall not be cited, or terms such as "legal," "per code," or their equivalent used as a substitute for specific information.

R106.2 Site Plan or Plot Plan. The construction documents submitted with the application for permit shall be accompanied by a site plan showing the size and location of new construction and existing structures on the site and distances from lot lines. In the case of demolition, the site plan shall show construction to be demolished and the location and size of existing structures and construction that are to remain on the site or plot. The building official is authorized to waive or modify the requirement for a site plan where the application for permit is for alteration or repair or where otherwise warranted.

> **NOTE:** The Building Department is separate from the Zoning Department. The Building Code requires a site plan even if you have already received approval from the Zoning Department. The same site plan used for Zoning will *probably* also be sufficient for Building Code purposes, but please make certain that the site plan includes the information required by the Building Code. Please note that the site plan must include the elevation of the main floor of the residence, the elevation of the proposed deck, and contours or spot elevations of the existing and proposed grade in the vicinity of the proposed deck.

R106.2.1 Private Sewage Disposal System. The site plan shall indicate the location of a private or public sewage disposal system. Private sewage disposal systems shall be designed and installed in accordance with the requirements of the Public Health Code adopted under authority of section 19a-36 of the Connecticut General Statutes. All technical and soil data required by the Public Health Code shall be submitted with the site plan. Approval of such systems shall be by the local authority having jurisdiction. When such approval is required by the local authority having jurisdiction, written proof of such approval shall be submitted to the building official prior to issuance of a building permit.

> **NOTE:** Septic tanks and leaching fields must be a minimum distance of five feet (5') from structures. This is why the site plan has to show the location of the septic system, if the property is not served by the public sewer system.

Section R507 Exterior Decks

R507.1 Decks. Wood-framed decks shall be in accordance with this section. Decks shall be designed for the live load required in Section R301.5 or the ground snow load indicated in Table R301.2, whichever is greater. For decks using materials and conditions not prescribed in this section, refer to Section R301.

R507.2 Materials. Materials used for the construction of decks shall comply with this section.

R507.2.1 Wood Materials. Wood materials shall be No. 2 grade or better lumber, preservative-treated in accordance with Section R317, or approved, naturally durable lumber, and termite protected where required in accordance with Section R318. Where design in accordance with Section R301 is provided, wood structural members shall be designed using the wet service factor defined in AWC NDS. Cuts, notches and drilled holes of preservative-treated wood members shall be treated in accordance with Section R317.1.1. All preservative-treated wood products in contact with the ground shall be labeled for such usage.

R507.2.1.1 Engineered Wood Products. Engineered wood products shall be in accordance with Section R502.

R507.2.2 Plastic Composite Deck Boards, Stair Treads, Guards or Handrails. Plastic composite exterior deck boards, stair treads, guards and handrails shall comply with the requirements of ASTM D7032 and this section.

R507.2.2.1 Labeling. Plastic composite deck boards and stair treads, or their packaging, shall bear a label that indicates compliance with ASTM D7032 and includes the allowable load and maximum allowable span determined in accordance with ASTM D7032. Plastic or composite handrails and guards, or their packaging, shall bear a label that indicates compliance with ASTM D7032 and includes the maximum allowable span determined in accordance with ASTM D7032.

R507.2.2.2 Flame Spread Index. Plastic composite deck boards, stair treads, guards, and handrails shall exhibit a flame spread index not exceeding 200 when tested in accordance with ASTM E84 or UL 723 with the test specimen remaining in place during the test.

Exception: Plastic composites determined to be noncombustible.

R507.2.2.3 Decay Resistance. Plastic composite deck boards, stair treads, guards and handrails containing wood, cellulosic or other biodegradable materials shall be decay resistant in accordance with ASTM D7032.

R507.2.2.4 Termite Resistance. Where required by Section 318, plastic composite deck boards, stair treads, guards and handrails containing wood, cellulosic or other biodegradable materials shall be termite resistant in accordance with ASTM D7032.

R507.2.2.5 Installation of Plastic Composites. Plastic composite deck boards, stair treads, guards and handrails shall be installed in accordance with this code and the manufacturer's instructions.

R507.2.3 Fasteners and Connectors. Metal fasteners and connectors used for all decks shall be in accordance with Section R317.3 and Table R507.2.3.

R507.2.4 Flashing. Flashing shall be corrosion-resistant metal of nominal thickness not less than 0.019 inch or approved nonmetallic material that is compatible with the substrate of the structure and the decking materials.

R507.3 Footings. Decks shall be supported on concrete footings or other approved structural systems designed to accommodate all loads in accordance with Section R301. Deck footings shall be sized to carry the imposed loads from the deck structure to the ground as shown in Figure R507.3.

Exceptions:

1. Footings shall not be required for free-standing decks consisting of joists directly supported on grade over their entire length.
2. Footings shall not be required for free-standing decks that meet all of the following criteria:
   2.1. The joists bear directly on precast concrete pier blocks at grade without support by beams or posts.
   2.2. The area of the deck does not exceed 200 square feet.
   2.3. The walking surface is not more than 20 inches above grade at any point within 36 inches measured horizontally from the edge.

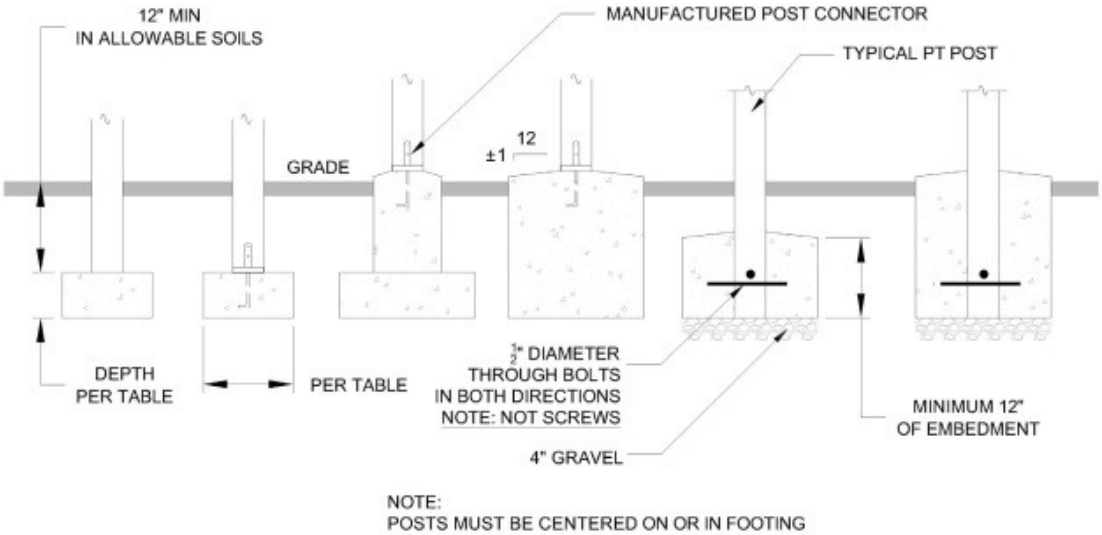

FIGURE R507.3
DECK POSTS TO DECK FOOTING CONNECTION

R507.3.1 Minimum Size. The minimum size of concrete footings shall be in accordance with Table R507.3.1, based on the tributary area and allowable soil-bearing pressure in accordance with Table R401.4.1.

TABLE R401.4.1
PRESUMPTIVE LOAD-BEARING VALUES
OF FOUNDATION MATERIALS[a]

CLASS OF MATERIAL	LOAD-BEARING PRESSURE (pounds per square foot)
Crystalline bedrock	12,000
Sedimentary and foliated rock	4,000
Sandy gravel and/or gravel (GW and GP)	3,000
Sand, silty sand, clayey sand, silty gravel and clayey gravel (SW, SP, SM, SC, GM and GC)	2,000
Clay, sandy, silty clay, clayey silt, silt and sandy siltclay (CL, ML, MH and CH)	1,500[b]

For SI: 1 pound per square foot = 0.047 kPa.

a. Where soil tests are required by Section R401.4, the allowable bearing capacities of the soil shall be part of the recommendations.

b. Where the building official determines that in-place soils with an allowable bearing capacity of less than 1,500 psf are likely to be present at the site, the allowable bearing capacity shall be determined by a soils investigation

NOTE: The requirements for piers and footings for exterior decks are significantly different in the 2022 State Building Code than they were in the 2018 State Building Code.

TABLE R507.3.1
MINIMUM FOOTING SIZE FOR DECKS

LIVE OR GROUND SNOW LOAD (psf)	TRIBUTARY AREA (ft²)	LOAD-BEARING VALUE OF SOILS (psf)								
		1,500			2,000			≥ 3,000		
		Side of a square footing (inches	Diameter of a round footing (inches	Thickness (inches)	Side of a square footing (inches	Diameter of a round footing (inches	Thickness (inches)	Side of a square footing (inches	Diameter of a round footing (inches	Thickness (inches)
40	5	7	8	6	7	8	6	7	8	6
	20	10	12	6	9	9	6	7	8	6
	40	14	16	6	12	14	6	10	12	6
	60	17	19	6	15	17	6	12	14	6
	80	20	22	7	17	19	6	14	16	6
	100	22	25	8	19	21	6	15	17	6
	120	24	27	9	21	23	7	17	19	6
	140	26	29	10	22	25	8	18	21	6
	160	28	31	11	24	27	9	20	22	7

The diagram below illustrates what the code means by "tributary area."

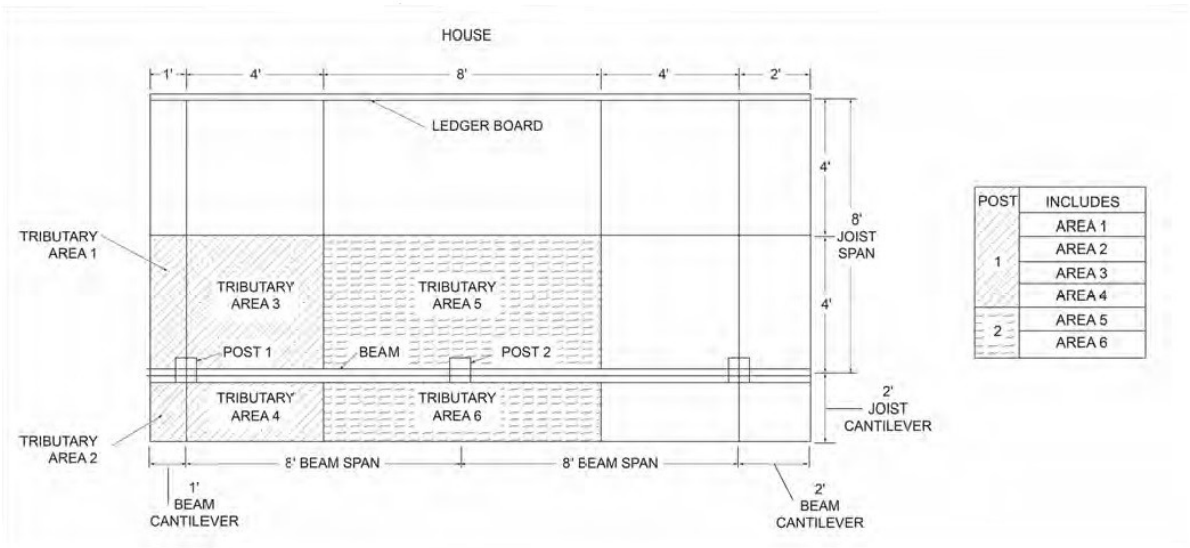

R507.3.2 Minimum Depth. Deck footings shall be placed not less than 12 inches (305 mm) below the undisturbed ground surface.

R507.3.3 Frost Protection. Where decks are attached to a frost-protected structure, deck footings shall be protected from frost by one or more of the following methods:

1. Extending below the frost line specified in Table R301.2.
2. Erecting on solid rock.
3. Other approved methods of frost protection.

NOTE: The frost depth for Southington is 42 inches (3'-6") below grade.

R507.4 Deck Posts. For single-level decks, wood post size shall be in accordance with Table R507.4.

NOTE: The live load for decks is 40 psf. The ground snow load for Southington is 30 psf. For simplicity, the table below does not include entries for snow loads greater than 40 psf.

TABLE R507.4
DECK POST HEIGHT

LOADS (psf)[b]	POST SPECIES[c]	POST SIZE[d]	TRIBUTARY AREA (ft^2)[g, h]							
			20	40	60	80	100	120	140	160
			MAXIMUM DECK POST HEIGHT[a] (feet – inches)							
40 live load	Southern Pine	4 x 4	14-0	13-8	11-0	9-5	8-4	7-5	6-9	6-2
		4 x 6	14-0	14-0	13-11	12-0	10-8	9-8	8-10	8-2
		6 x 6	14-0	14-0	14-0	14-0	14-0	14-0	14-0	14-0
		8 x 8	14-0	14-0	14-0	14-0	14-0	14-0	14-0	14-0
	Douglas fir[e] Hem-fir[e] SPF[e]	4 x 4	14-0	13-6	10-10	9-3	8-0	7-0	6-2	5-3
		4 x 6	14-0	14-0	13-10	11-10	10-6	9-5	8-7	7-10
		6 x 6	14-0	14-0	14-0	14-0	14-0	14-0	14-0	14-0
		8 x 8	14-0	14-0	14-0	14-0	14-0	14-0	14-0	14-0
	Redwood[f] Western cedars[f] Ponderosa pine[f] Red pine[f]	4 x 4	14-0	13-2	10-3	8-1	5-8	NP	NP	NP
		4 x 6	14-0	14-0	13-6	11-4	9-9	8-4	6-9	4-7
		6 x 6	14-0	14-0	14-0	14-0	14-0	14-0	13-7	9-7
		8 x 8	14-0	14-0	14-0	14-0	14-0	14-0	14-0	14-0

For SI: 1 inch – 25.4 mm, 1 foot = 304.8 mm, 1 pound per square foot = 0.0479 kPa
NP = Not Permitted
a. Measured from the underside of the beam to the top of the footing or pier.
b. 10 psf dead load. Snow load not assumed to be concurrent with live load.
c. No. 2 grade, wet service factor included.
d. Notched deck posts shall be sized to accommodate beam size in accordance with Section R507.5.2.
e. Includes incising factor.
f. Incising factor not included.
g. Area, in square feet, of deck surface supported by post and footings.
h. Interpolation permitted. Extrapolation not permitted.

R507.4.1 Deck Post to Deck Footing Connection. Where posts bear on concrete footings in accordance with Section R403 and Figure R507.3, lateral restraint shall be provided by manufactured connectors or a minimum post embedment of 12 inches (305 mm) in surrounding soils or concrete piers. Other footing systems shall be permitted.

Exception: Where expansive, compressible, shifting or other questionable soils are present, surrounding soils shall not be relied on for lateral support.

R507.5 Deck Beams. Maximum allowable spans for wood deck beams, as shown in Figure R507.5, shall be in accordance with Tables R507.5(1) through R507.5(4). Beam plies shall be fastened together with two rows of 10d (3-inch × 0.128-inch) nails minimum at 16 inches (406 mm) on center along each edge. Beams shall be permitted to cantilever at each end up to one-fourth of the actual beam span. Deck beams of other materials shall be permitted where designed in accordance with accepted engineering practices.

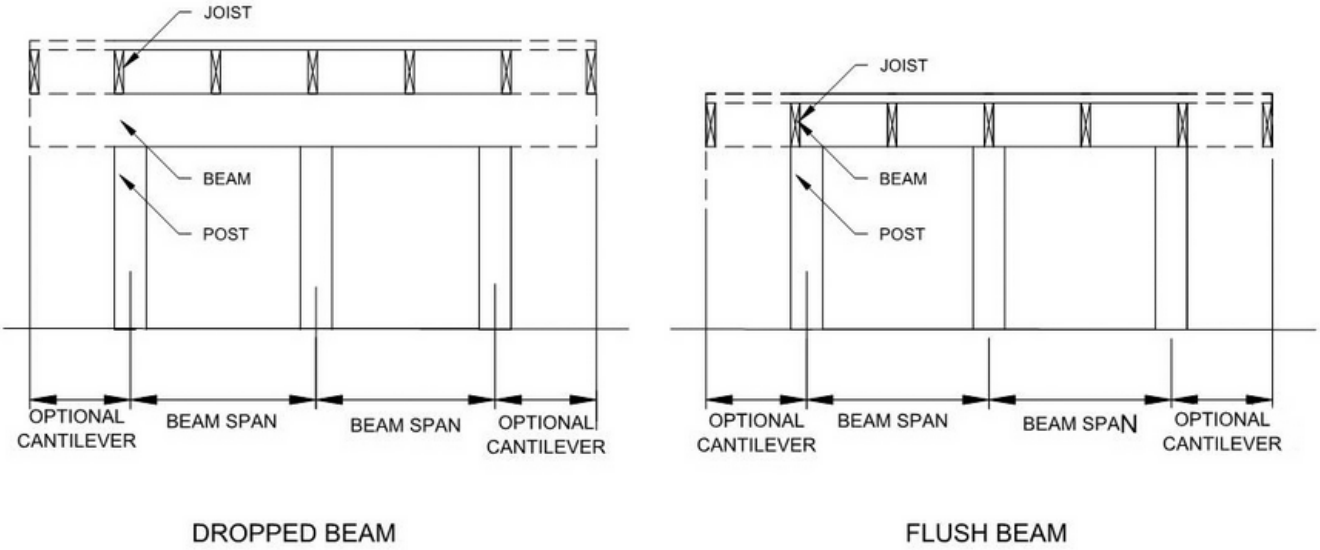

FIGURE R507.5
TYPICAL DECK JOIST SPANS

TABLE R507.5(1)
MAXIMUM DECK BEAM SPAN—40 PSF LIVE LOAD[c]

BEAM SPECIES[d]	BEAM SIZE[e]	EFFECTIVE DECK JOIST SPAN LENGTH[a, l] (feet)						
		6	8	10	12	14	16	18
		MAXIMUM DECK BEAM SPAN LENGTH (feet-inches)[a, b, f]						
Southern pine	1 – 2 x 6	4-7	4-0	3-7	3-3	3-0	2-10	2-8
	1 – 2 x 8	5-11	5-1	4-7	4-2	3-10	3-7	3-5
	1 – 2 x 10	7-0	6-0	5-5	4-11	4-7	4-3	4-0
	1 – 2 x 12	8-3	7-1	6-4	5-10	5-5	5-0	4-9
	2 – 2 x 6	6-11	5-11	5-4	4-10	4-6	4-3	4-0
	2 – 2 x 8	8-9	7-7	6-9	6-2	5-9	5-4	5-0
	2 – 2 x 10	10-4	9-0	8-0	7-4	6-9	6-4	6-0
	2 – 2 x 12	12-2	10-7	9-5	8-7	8-0	7-5	7-0
	3 – 2 x 6	8-6	7-5	6-8	6-1	5-8	5-3	4-11
	3 – 2 x 8	10-11	9-6	8-6	7-9	7-2	6-8	6-4
	3 – 2 x 10	13-0	11-2	10-0	9-2	8-6	7-11	7-6
	3 – 2 x 12	15-3	13-3	11-10	10-9	10-0	9-4	8-10
Douglas fir-larch[g]	1 – 2 x 6	4-1	3-6	3-0	2-8	2-5	2-3	2-1
	1 – 2 x 8	5-6	4-8	4-0	3-6	3-2	2-11	2-9
	1 – 2 x 10	6-8	5-10	5-1	4-6	4-1	3-9	3-6
Hem-fir[g]	1 – 2 x 12	7-9	6-9	6-0	5-6	5-0	3-9	3-6

SPF	2 – 2 x 6	6-1	5-3	4-9	4-4	3-11	3-7	3-3
	2 – 2 x 8	8-2	7-1	6-4	5-9	5-2	4-8	4-4
	2 – 2 x 10	10-0	8-7	7-9	7-0	6-6	6-0	5-6
	2 – 2 x 12	11-7	10-0	8-11	8-2	7-7	7-1	6-8
	3 – 2 x 6	7-8	6-8	6-0	5-6	5-1	4-9	4-6
	3 – 2 x 8	10-3	8-10	7-11	7-3	6-8	6-3	5-11
	3 – 2 x 10	12-6	10-10	9-8	8-10	8-2	7-8	7-2
	3 – 2 x 12	14-6	12-7	11-3	10-3	9-6	8-11	8-5
Redwood[h] Western cedars[h] Poderosa pine[h] Red pine[h]	1 – 2 x 6	4-2	3-7	3-1	2-9	2-6	2-3	2-2
	1 – 2 x 8	5-4	4-7	4-1	3-7	3-3	3-0	2-10
	1 – 2 x 10	6-6	5-7	5-0	4-7	4-2	3-10	3-7
	1 – 2 x 12	7-6	6-6	5-10	5-4	4-11	4-7	4-4
	2 – 2 x 6	6-2	5-4	4-10	4-5	4-0	3-8	3-4
	2 – 2 x 8	7-10	6-10	6-1	5-7	5-2	4-10	4-5
	2 – 2 x 10	9-7	8-4	7-5	6-9	6-3	5-10	5-6
	2 – 2 x 12	11-1	9-8	8-7	7-10	7-3	6-10	6-5
	3 – 2 x 6	7-8	6-9	6-0	5-6	5-1	4-9	4-6
	3 – 2 x 8	9-10	8-6	7-7	6-11	6-5	6-0	5-8
	3 – 2 x 10	12-0	10-5	9-4	8-6	7-10	7-4	6-11
	3 – 2 x 12	13-11	12-1	10-9	9-10	9-1	8-6	8-1

For SI: 1 inch – 25.4 mm, 1 foot = 304.8 mm, 1 pound per square foot = 0.0479 kPa, 1 pound = 0.454 kg.

a. Interpolation permitted. Extrapolation not permitted.
b. Beams supporting a single span of joists with or without cantilever.
c. Dead load = 10 psf, L/Δ = 360 at main span, L/Δ = 180 at cantilever. Snow load is not assumed to be concurrent with live load.
d. No. 2 grade, wet service factor included.
e. Beam depth shall be equal to or greater than the depth of intersecting joist for a flush beam connection.
f. Beam cantilevers are limited to the adjacent beam's span divided by 4.
g. Includes incising factor.
h. Incising factor not included.
i. Deck joist span as shown in Figure R507.5
j. For calculation of effective deck joist span, the actual joist span length shall be multiplied by the joist span factor in accordance with Table R507.5(5).

TABLE R507.5(5)

JOIST SPAN FACTORS FOR CALCULATING EFFECTIVE DECK JOIST SPAN
[for use with Note j in Tables R507.5(1), R507.5(2), R507.5(3) and R507.5(4)]

C/j[a]	JOIST SPAN FACTOR
0 (no cantilever)	0.66
1/12 (0.87)	0.72
1/10 (0.10)	0.80)
1/8 (0.125)	0.84
1/6 (0.167)	0.90
1/4 (0.240)	1.00

For SI: 1 foot = 304.8 mm.

a. C = actual joist cantilever length (feet); j = actual joist span length (feet).

R507.5.1 Deck Beam Bearing. The ends of beams shall have not less than 11/2 inches (38 mm) of bearing on wood or metal and not less than 3 inches (76 mm) of bearing on concrete or masonry for the entire width

of the beam. Where multiple-span beams bear on intermediate posts, each ply must have full bearing on the post in accordance with Figures R507.5.1(1) and R507.5.1(2).

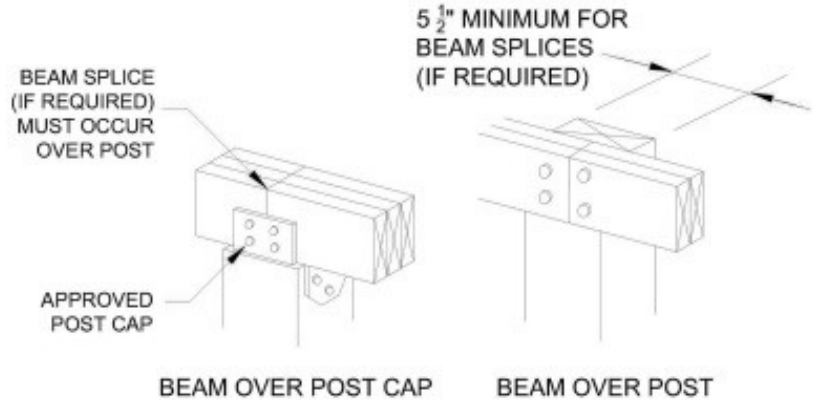

For SI: 1 inch = 25.4 mm.

FIGURE R507.5.1(1)
DECK BEAM TO DECK POST

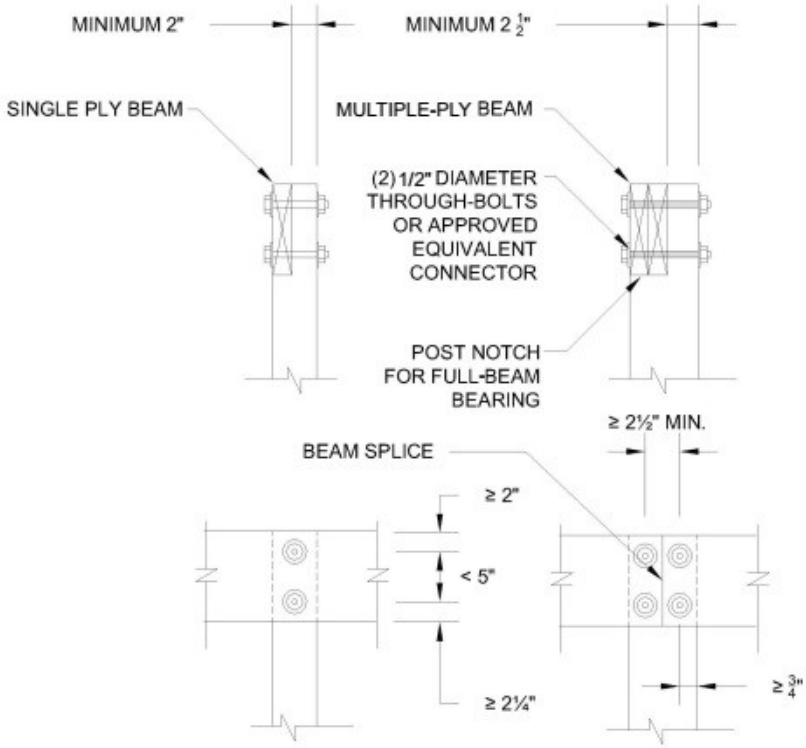

For SI: 1 inch = 25.4 mm.

FIGURE R507.5.1(2)
NOTCHED POST-TO-BEAM CONNECTION

R507.5.2 Deck Beam Connection to Supports. Deck beams shall be attached to supports in a manner capable of transferring vertical loads and resisting horizontal displacement. Deck beam connections to wood posts shall be in accordance with Figures R507.5.1(1) and R507.5.1(2). Manufactured post-to-beam connectors shall be sized for the post and beam sizes. Bolts shall have washers under the head and nut.

R507.6 Deck Joists. Maximum allowable spans for wood deck joists, as shown in Figure R507.6, shall be in accordance with Table R507.6. The maximum joist spacing shall be limited by the decking materials in accordance with Table R507.7.

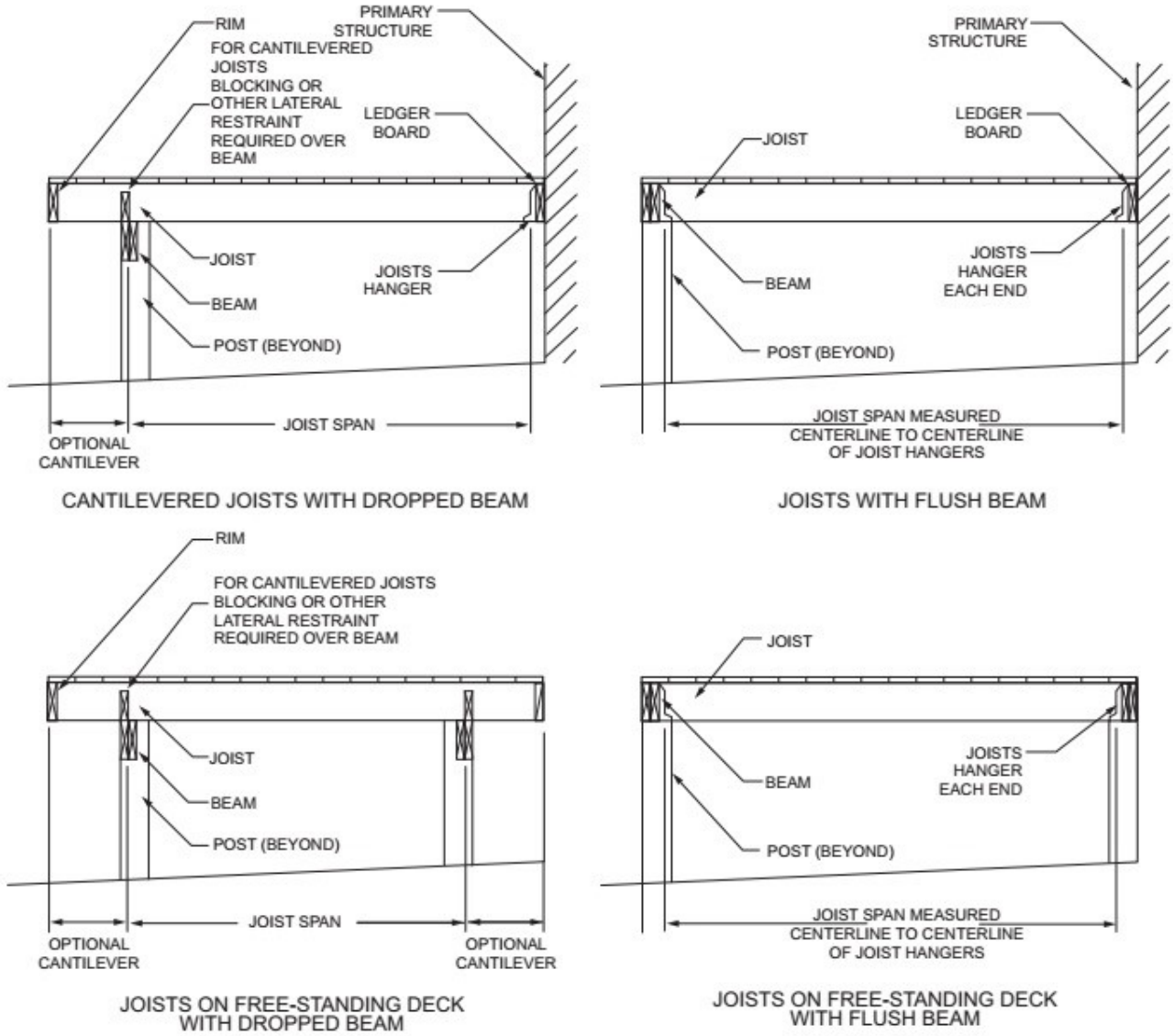

FIGURE R507.6
TYPICAL DECK JOIST SPANS

TABLE R507.6
MAXIMUM DECK JOIST SPANS

LOAD[a] (psf)	JOIST SPECIES[b]	JOIST SIZE	ALLOWABLE JOIST SPAN[b, c] (feet–inches)			MAXIMUM CANTILEVER[d, f] (feet–inches)							
			Joist spacing (inches			Joist back span[g] (inches)							
			12	16	24	4	6	8	10	12	14	16	18
40 live load	Southern Pine	2 x 6	9-11	9-0	7-7	1-0	1-6	1-5	NP	NP	NP	NP	NP
		2 x 8	13-1	11-10	9-8	1-0	1-6	2-0	2-6	2-3	NP	NP	NP
		2 x 10	16-2	14-0	11-5	1-0	1-6	2-0	2-6	3-0	3-4	3-4	NP
		2 x 12	18-0	16-6	13-6	1-0	1-6	2-0	2-6	3-0	3-6	4-0	4-1
	Douglas fir-larch[e] Hem-fir[e] SPF[e]	2 x 6	9-6	8-4	6-10	1-0	1-6	1-4	NP	NP	NP	NP	NP
		2 x 8	12-6	11-1	9-1	1-0	1-6	2-0	2-3	2-0	NP	NP	NP
		2 x 10	15-8	13-7	11-1	1-0	1-6	2-0	2-6	3-0	3-3	NP	NP
		2 x 12	18-0	15-9	12-10	1-0	1-6	2-0	2-6	3-0	3-6	3-11	3-11
	Redwood[f] Western cedars[f] Ponderosa pine[f] Red pine[f]	2 x 6	8-10	8-0	6-10	1-0	1-4	1-1	NP	NP	NP	NP	NP
		2 x 8	11-8	10-7	8-8	1-0	1-6	2-0	1-11	NP	NP	NP	NP
		2 x 10	14-11	13-0	10-7	1-0	1-6	2-0	2-6	3-0	2-9	NP	NP
		2 x 12	17-5	15-1	12-4	1-0	1-6	2-0	2-6	3-0	3-6	3-8	NP

For SI: 1 inch = 25.4 mm, 1 foot = 304.8 mm, 1 pound per square foot = 0.0479 kPa, 1 pound = 0.454 kg.
NP = Not Permitted.
a. Dead load = 10 psf. Snow load not assumed to be concurrent with live load.
b. No. 2 grade, wet service factor included.
c. L/Δ = 360 at main span.
d. L/Δ = 180 at cantilever with a 220-pound point load applied to end.
e. Includes incising factor.
f. Incising factor not included.
g. Interpolation allowed. Extrapolation is not allowed.

R507.6.1 Deck Joist Bearing. The ends of joists shall have not less than 11/2 inches of bearing on wood or metal and not less than 3 inches of bearing on concrete or masonry over its entire width. Joists bearing on top of a multiple-ply beam or ledger shall be fastened in accordance with Table R602.3(1). Joists bearing on top of a single-ply beam or ledger shall be attached by a mechanical connector. Joist framing into the side of a beam or ledger board shall be supported by approved joist hangers.

R507.6.2 Deck Joist Lateral Restraint. Joist ends and bearing locations shall be provided with lateral resistance to prevent rotation. Where lateral restraint is provided by joist hangers or blocking between joists, their depth shall equal not less than 60 percent of the joist depth. Where lateral restraint is provided by rim joists, they shall be secured to the end of each joist with not fewer than three 10d (3-inch by 0.128-inch) nails or three No. 10 x 3-inch-long wood screws.

R507.7 Decking. Maximum allowable spacing for joists supporting wood decking, excluding stairways, shall be in accordance with Table R507.7. Wood decking shall be attached to each supporting member with not less than two 8d threaded nails or two No. 8 wood screws. Maximum allowable spacing for joists supporting plastic composite decking shall be in accordance with Section R507.2. Other approved decking or fastener systems shall be installed in accordance with the manufacturer's installation requirements.

TABLE R507.7
MAXIMUM JOIST SPACING FOR WOOD DECKING

DECKING MATERIAL TYPE AND NOMINAL SIZE	DECKING PERPENDICULAR TO JOIST		DECKING DIAGONAL TO JOIST[a]	
	Single span[c]	Multiple span[c]	Single span[c]	Multiple span[c]
	Maximum on-center joist spacing (inches)			
1¼-inch-thick wood[b]	12	16	8	12
2-inch-thick wood	24	24	18	24

For SI: 1 inch = 25.4 mm, 1 foot = 304.8 mm, 1 degree = 0.01745 rad.
a. Maximum angle of 45 degrees from perpendicular for wood deck boards.
b. Other maximum span provided by an accredited lumber grading or inspection agency also allowed.
c. Individual wood deck boards supported by two joists shall be considered single span and three or more joists shall be considered multiple span.

NOTE: Trex™ and other synthetic deck materials may have different span limits. The manufacturer's printed documentation will govern for these types of decking.

R507.8 Vertical and Lateral Supports. Where supported by attachment to an exterior wall, decks shall be positively anchored to the primary structure and designed for both vertical and lateral loads. Such attachment shall not be accomplished by the use of toenails or nails subject to withdrawal. For decks with cantilevered framing members, connection to exterior walls or other framing members shall be designed and constructed to resist uplift resulting from the full live load specified in Table R301.5 acting on the cantilevered portion of the deck. Where positive connection to the primary building structure cannot be verified during inspection, decks shall be self-supporting.

R507.9 Vertical and Lateral Supports at Band Joist. Vertical and lateral supports for decks shall comply with this section.

R507.9.1 Vertical Supports. Vertical loads shall be transferred to band joists with ledgers in accordance with this section.

R507.9.1.1 Ledger Details. Deck ledgers shall be a minimum 2-inch by 8-inch nominal, pressure-preservative-treated Southern pine, incised pressure-preservative-treated hem-fir, or approved, naturally durable, No. 2 grade or better lumber. Deck ledgers shall not support concentrated loads from beams or girders. Deck ledgers shall not be supported on stone or masonry veneer.

R507.9.1.2 Band Joist Details. Band joists supporting a ledger shall be a minimum 2-inch-nominal, solid-sawn, spruce-pine-fir or better lumber or a minimum 1-inch nominal engineered wood rim boards in accordance with Section R502.1.7. Band joists shall bear fully on the primary structure capable of supporting all required loads.

R507.9.1.3 Ledger to Band Joist Details. Fasteners used in deck ledger connections in accordance with Table R507.9.1.3(1) shall be hot-dipped galvanized or stainless steel and shall be installed in accordance with Table R507.9.1.3(2) and Figures R507.9.1.3(1) and R507.9.1.3(2).

NOTE: The live load for decks is 40 psf. The ground snow load for Southington is 30 psf. For simplicity, the table below does not include entries for snow loads greater than 40 psf.

TABLE R507.9.1.3(1)
DECK LEDGER CONNECTION TO BAND JOIST

LOAD[c] (psf)	JOIST SPAN[a] (feet)	ON-CENTER SPACING OF FASTENERS[b] (inches)		
		½-inch diameter lag screw with ½-inch maximum sheathing[d, e]	½-inch diameter bolt with ½-inch maximum sheathing[e]	½-inch diameter bolt with 1-inch maximum sheathing[f]
40 live load	6	30	36	36
	8	23	36	36
	10	18	34	29
	12	15	29	24
	14	13	24	21
	16	11	21	18
	18	10	19	16

For SI: 1 inch = 25.4 mm, 1 foot = 304.8 mm, 1 pound per square foot = 0.0479 kPa.
a. Interpolation permitted. Extrapolation is not permitted.
b. Ledgers shall be flashed in accordance with Section R703.4 to prevent water from contacting the house band joist.
c. Dead Load = 10 psf. Snow load shall not be assumed to act concurrently with live load.
d. The tip of the lag screw shall fully extend beyond the inside face of the band joist.
e. Sheathing shall be wood structural panel or solid sawn lumber.
f. Sheathing shall be permitted to be wood structural panel, gypsum board, fiberboard, lumber or foam sheathing. Up to 1/2-inch thickness of stacked washers shall be permitted to substitute for up to 1/2 inch of allowable sheathing thickness where combined with wood structural panel or lumber sheathing.

TABLE R507.9.1.3(2)
PLACEMENT OF LAG SCREWS AND BOLTS IN DECK LEDGERS AND BAND JOIST

MINIMUM END AND EDGE DISTANCES AND SPACING BETWEEN ROWS				
	TOP EDGE	BOTTOM EDGE	ENDS	ROW SPACING
Ledger[a]	2 inches[d]	¾ inch	2 inches[b]	1⅝ inches[b]
Band joist[c]	¾ inch	2 inches	2 inches[b]	1⅝ inches[b]

For SI: 1 inch = 25.4 mm.
a. Lag screws or bolts shall be staggered from the top to the bottom along the horizontal run of the deck ledger in accordance with Figure R507.9.1.3(1).
b. Maximum 5 inches.
c. For engineered rim joists, the manufacturer's recommendations shall govern.
d. The minimum distance from bottom row of lag screws or bolts to the top edge of the ledger shall be in accordance with Figure R507.9.1.3(1).

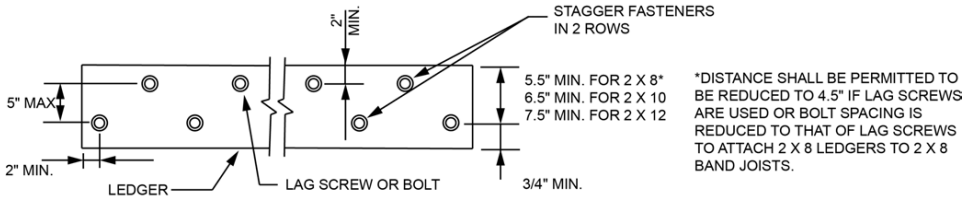

For SI: 1 inch = 25.4 mm.

FIGURE R507.9.1.3(1)
PLACEMENT OF LAG SCREWS AND BOLTS IN LEDGERS

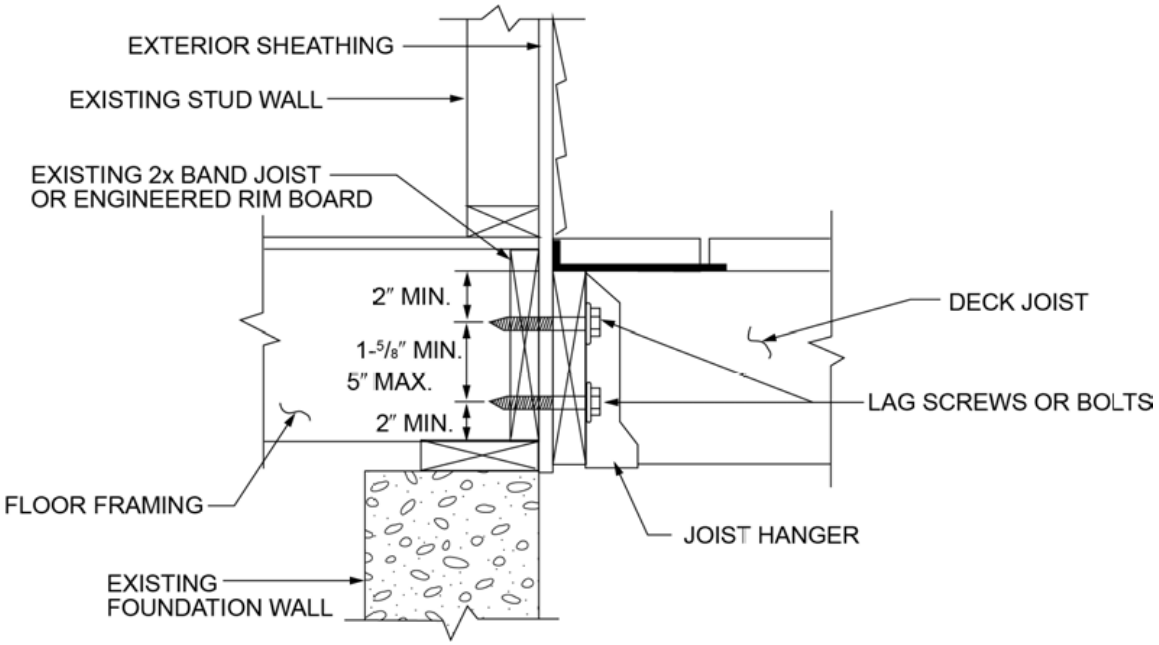

For SI: 1 inch = 25.4 mm.

FIGURE R507.9.1.3(2)
PLACEMENT OF LAG SCREWS AND BOLTS IN BAND JOISTS

R507.9.2 Lateral Connection. Lateral loads shall be transferred to the ground or to a structure capable of transmitting them to the ground. Where the lateral load connection is provided in accordance with Figure R507.9.2(1), hold-down tension devices shall be installed in not less than two locations per deck, within 24 inches (610 mm) of each end of the deck. Each device shall have an allowable stress design capacity of not less than 1,500 pounds (6672 N). Where the lateral load connections are provided in accordance with Figure R507.9.2(2), the hold-down tension devices shall be installed in not less than four locations per deck, and each device shall have an allowable stress design capacity of not less than 750 pounds (3336 N).

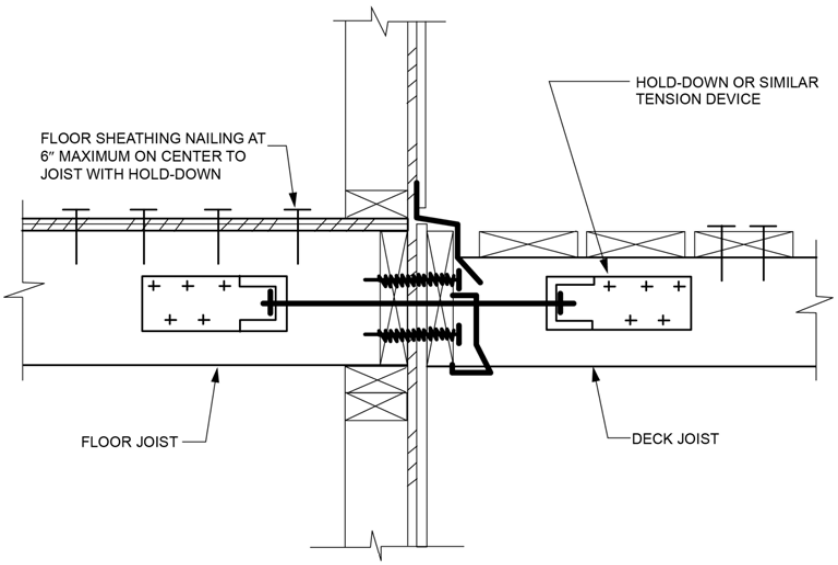

For SI: 1 inch = 25.4 mm.

FIGURE R507.9.2(1)
DECK ATTACHMENT FOR LATERAL LOADS

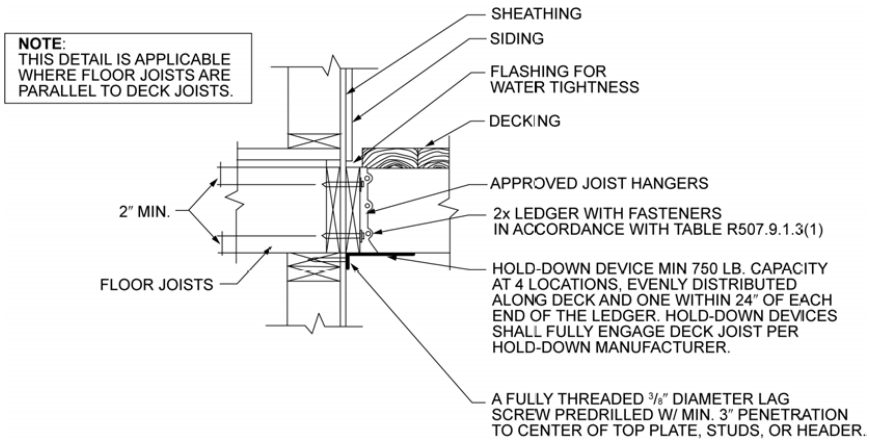

For SI: 1 inch = 25.4 mm.

FIGURE R507.9.2(2)
DECK ATTACHMENT FOR LATERAL LOADS

R507.10 Exterior Guards. Guards shall be constructed to meet the requirements of Sections R301.5 and R312, and this section.

R507.10.1 Support of Guards. Where guards are supported on deck framing, guard loads shall be transferred to the deck framing with a continuous load path to the deck joists.

R507.10.1.1 Guards Supported by Side of Deck Framing. Where guards are connected to the interior or exterior side of a deck joist or beam, the joist or beam shall be connected to the adjacent joists to prevent rotation of the joist or beam. Connections relying only on fasteners in end grain withdrawal are not permitted.

R507.10.1.2 Guards Supported on Top of Deck Framing. Where guards are mounted on top of the decking, the guards shall be connected to the deck framing or blocking and installed in accordance with manufacturer's instructions to transfer the guard loads to the adjacent joists.

R507.10.2 Wood Posts at Deck Guards. Where 4-inch by 4-inch (102 mm by 102 mm) wood posts support guard loads applied to the top of the guard, such posts shall not be notched at the connection to the supporting structure.

R507.10.3 Plastic Composite Guards. Plastic composite guards shall comply with the provisions of Section R507.2.2.

R507.10.4 Other Guards. Other guards shall be in accordance with either manufacturer's instructions or accepted engineering principles.

NOTE: The diagrams below illustrate the importance of proper connections between the uprights for guard rails and the deck framework.

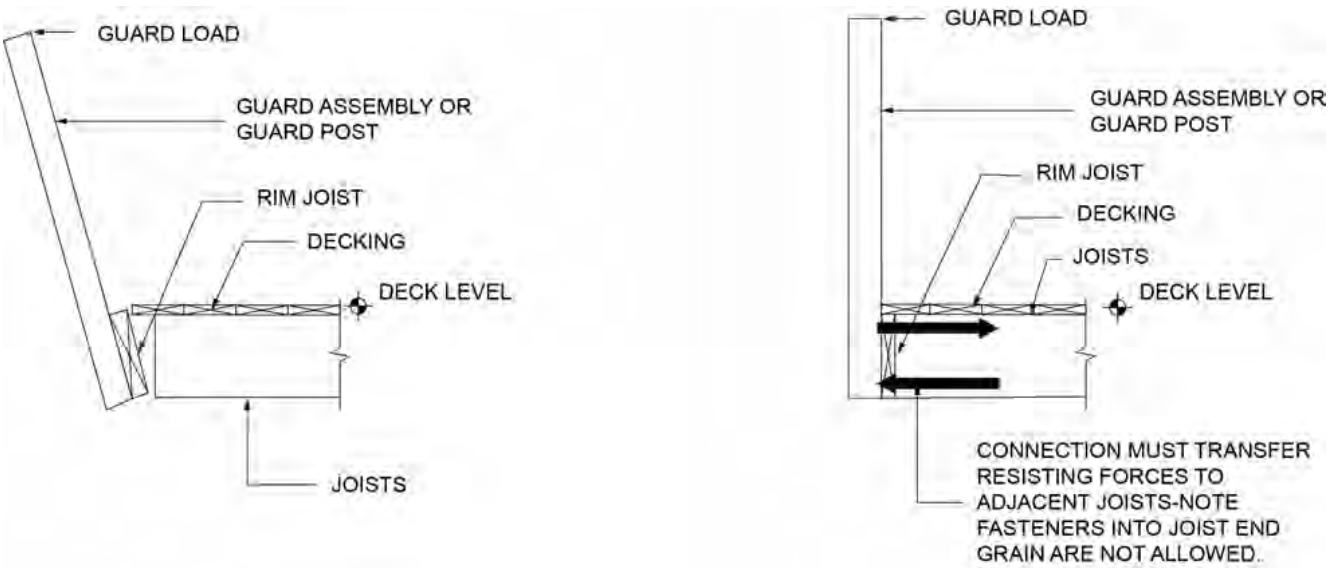

Commentary Figure R507.10.1.1(1)
GUARD AT RIM JOIST

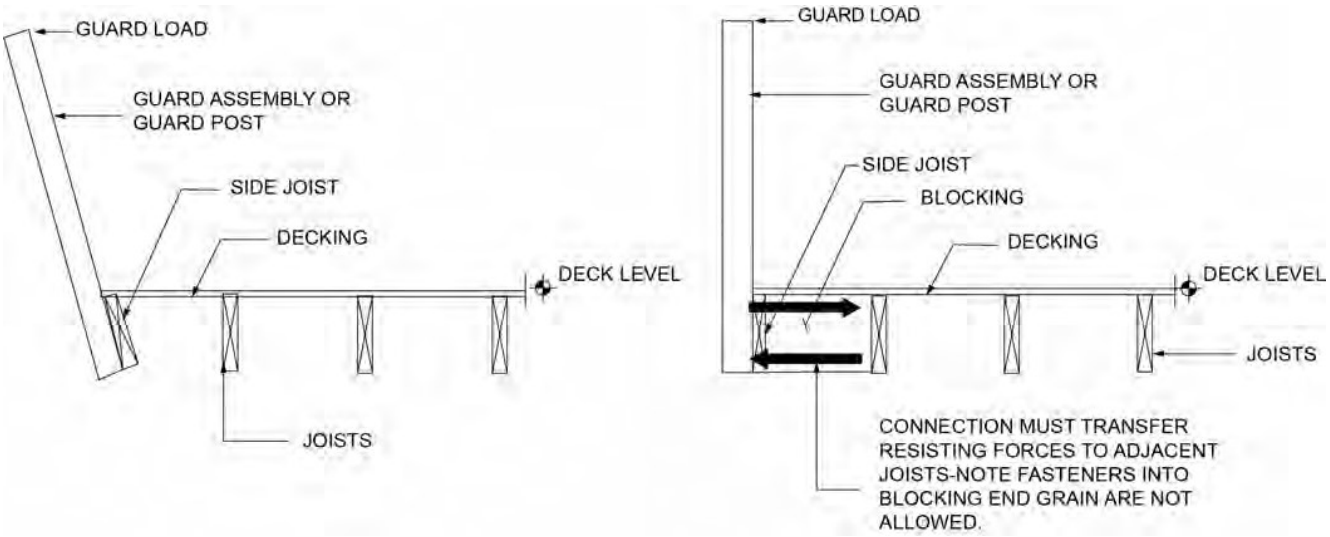

Commentary Figure R507.10.1.1(2)
GUARD AT SIDE JOIST

STAIRS

R403.1.4.1 Frost Protection. Except where otherwise protected from frost, foundation walls, piers and other permanent supports of buildings and structures shall be protected from frost by one or more of the following methods:

1. Extended below the frost line specified in Table R301.2.(1).
2. Constructed in accordance with Section R403.3.
3. Constructed in accordance with ASCE 32.
4. Erected on solid rock.

Footings shall not bear on frozen soil unless the frozen condition is permanent.

Exceptions:

1. Protection of free-standing accessory structures with an area of 600 square feet or less, of light-frame construction, with an eave height of 10 feet or less shall not be required.
2. Protection of freestanding accessory structures with an area of 400 square feet or less, of other than light-frame construction, with an eave height of 10 feet or less shall not be required.
3. Decks and ramps not supported by a dwelling need not be provided with footings that extend below
4. the frost line.
5. The footing for the grade level termination of stairs or ramps attached to decks or landings, whether the deck or landing is supported by a dwelling or not, shall only be required to be placed at least 12 inches below the undisturbed ground surface in accordance with Section R403.1.4.

R311.5 Landing, Deck, Balcony and Stair Construction and Attachment. Exterior landings, decks, balconies, stairs and similar facilities shall be positively anchored to the primary structure to resist both vertical and lateral

forces or shall be designed to be self-supporting. Attachment shall not be accomplished by use of toenails or nails subject to withdrawal.

R311.7 Stairways. Where required by this code or provided, stairways shall comply with this section.

Exceptions:

1. Stairways not within or serving a building, porch or deck.
2. Stairways leading to nonhabitable attics.
3. Stairways leading to crawl spaces.

R311.7.1 Width. Stairways shall not be less than 36 inches in clear width at all points above the permitted handrail height and below the required headroom height. The clear width of stairways at and below the handrail height, including treads and landings, shall not be less than 31½ inches where a handrail is installed on one side and 27 inches where handrails are provided on both sides.

R311.7.3 Vertical Rise. A flight of stairs shall not have a vertical rise greater than 12 feet 7 inches between floor levels or landings.

R311.7.4 Walkline. The walkline across winder treads and landings shall be concentric to the turn and parallel to the direction of travel entering and exiting the turn. The walkline shall be located 12 inches from the inside of the turn. The 12-inch dimension shall be measured from the widest point of the clear stair width at the walking surface. Where winders are adjacent within a flight, the point of the widest clear stair width of the adjacent winders shall be used.

R311.7.5 Stair Treads and Risers. Stair treads and risers shall meet the requirements of this section. For the purposes of this section, dimensions and dimensioned surfaces shall be exclusive of carpets, rugs or runners.

R311.7.5.1 Risers. The riser height shall be not more than 8¼ inches. The riser shall be measured vertically between leading edges of adjacent treads. The greatest riser height within any flight of stairs shall not exceed the smallest by more than ⅜ inch. Risers shall be vertical or sloped from the underside of the nosing of the tread above at an angle not more than 30 degrees from the vertical. Open risers are permitted provided that the opening between treads does not permit the passage of a 4-inch-diameter sphere.

Exceptions:

1. The maximum riser height of existing stairs serving existing unfinished attics or existing unfinished basements being converted to habitable space or replacement stairs where the pitch or slope cannot be reduced because of existing construction shall be 9 inches, measured in accordance with Section R311.7.5.1.
2. The opening between adjacent treads is not limited on spiral stairways.
3. The riser height of spiral stairways shall be in accordance with Section R311.7.10.1.

R311.7.5.2 Treads. The minimum tread depth shall be 9 inches. The tread depth shall be measured horizontally between the vertical planes of the foremost projection of adjacent treads and at a right angle to the tread's leading edge. The greatest tread depth within any flight of stairs shall not exceed the smallest by more than ⅜ inch.

Exception: The minimum tread depth of existing stairs serving existing unfinished attics or existing unfinished basements being converted to habitable space or replacement stairs within existing dwellings shall be 8 inches, measured in accordance with Section R311.7.5.2.

R311.7.5.3 Nosings. Nosings at treads, landings and floors of stairways shall have a radius of curvature at the nosing not greater than 9/16 inch or a bevel not greater than ½ inch. A nosing projection not less than ¾ inch and not more than 1¼ inches shall be provided on stairways. The greatest nosing projection shall not exceed the smallest nosing projection by more than ⅜ inch within a stairway.

Exception: A nosing projection is not required where the tread depth is not less than 11 inches.

R311.7.5.4 Exterior Plastic Composite Stair Treads. Plastic composite exterior stair treads shall comply with the provisions of this section and Section R507.2.2.

R311.7.6 Landings for Stairways. There shall be a floor or landing at the top and bottom of each stairway. The width perpendicular to the direction of travel shall be not less than the width of the flight served. For landings of shapes other than square or rectangular the depth at the walk line and the total area shall be not less than that of a quarter circle with a radius equal to the required landing width. Where the stairway has a straight run, the depth in the direction of travel shall be not less than 36 inches (914 mm).

Exceptions:

1. A floor or landing is not required at the top of an interior flight of stairs, including stairs in an enclosed garage, provided that a door does not swing over the stairs.
2. The depth in the direction of travel of landings of existing stairs serving existing unfinished attics or basements being converted to habitable space or replacement stairs within existing dwellings shall be at least equal to the stair width but not less than 32 inches (813 mm) where Section R311.7.1, exception 2 is utilized for a reduced stair width.

R311.7.7 Stairway Walking Surface. The walking surface of treads and landings of stairways shall be sloped not steeper than 1 unit vertical in 48 units horizontal (2-percent slope).

Exception: Where the surface of a landing is required elsewhere in the code to drain surface water, the walking surface of the landing shall be sloped not steeper than 1 unit vertical in 20 units horizontal (5-percent slope) in the direction of travel.

R311.7.8 Handrails. Handrails shall be provided on not less than one side of each flight of stairs with four or more risers.

R311.7.8.1 Height. Handrail height, measured vertically from the sloped plane adjoining the tread nosing, or finish surface of ramp slope, shall be not less than 34 inches (864 mm) and not more than 38 inches (965 mm).

Exceptions:

1. The use of a volute, turnout or starting easing shall be allowed over the lowest tread.
2. Where handrail fittings or bendings are used to provide continuous transition between flights, transitions at winder treads, the transition from handrail to guard, or used at the start of a flight, the handrail height at the fittings or bendings shall be permitted to exceed 38 inches (965 mm).

R311.7.8.2 Handrail Projection. Handrails shall not project more than 41/2 inches (114 mm) on either side of the stairway.

Exception: Where nosings of landings, floors or passing flights project into the stairway reducing the clearance at passing handrails, handrails shall project not more than 61/2 inches (165 mm) into the stairway, provided that the stair width and handrail clearance are not reduced to less than that required.

R311.7.8.3 Handrail Clearance. Handrails adjacent to a wall shall have a space of not less than 11/2 inches (38 mm) between the wall and the handrails.

R311.7.8.4 Continuity. Handrails shall be continuous for the full length of the flight, from a point directly above the top riser of the flight to a point directly above the lowest riser of the flight. Handrail ends shall be returned toward a wall, guard walking surface continuous to itself, or terminate to a post.

Exceptions:

1. Handrail continuity shall be permitted to be interrupted by a newel post at a turn in a flight with winders, at a landing, or over the lowest tread.
2. A volute, turnout or starting easing shall be allowed to terminate over the lowest tread and over the top landing.

R311.7.8.5 Grip Size. Required handrails shall be of one of the following types or provide equivalent graspability.

1. Type I. Handrails with a circular cross section shall have an outside diameter of not less than 11/4 inches (32 mm) and not greater than 2 inches (51 mm). If the handrail is not circular, it shall have a perimeter of not less than 4 inches (102 mm) and not greater than 61/4 inches (160 mm) and a cross section of not more than 21/4 inches (57 mm). Edges shall have a radius of not less than 0.01 inch (0.25 mm).
2. Type II. Handrails with a perimeter greater than 61/4 inches (160 mm) shall have a graspable finger recess area on both sides of the profile. The finger recess shall begin within 3/4 inch (19 mm) measured vertically from the tallest portion of the profile and have a depth of not less than 5/16 inch (8 mm) within 7/8 inch (22 mm) below the widest portion of the profile. This required depth shall continue for not less than 3/8 inch (10 mm) to a level that is not less than 13/4 inches (45 mm) below the tallest portion of the profile. The width of the handrail above the recess shall be not less than 11/4 inches (32 mm) and not more than 23/4 inches (70 mm). Edges shall have a radius of not less than 0.01 inch (0.25 mm).

R311.7.8.6 Exterior Plastic Composite Handrails. Plastic composite exterior handrails shall comply with the requirements of Section R507.2.2.

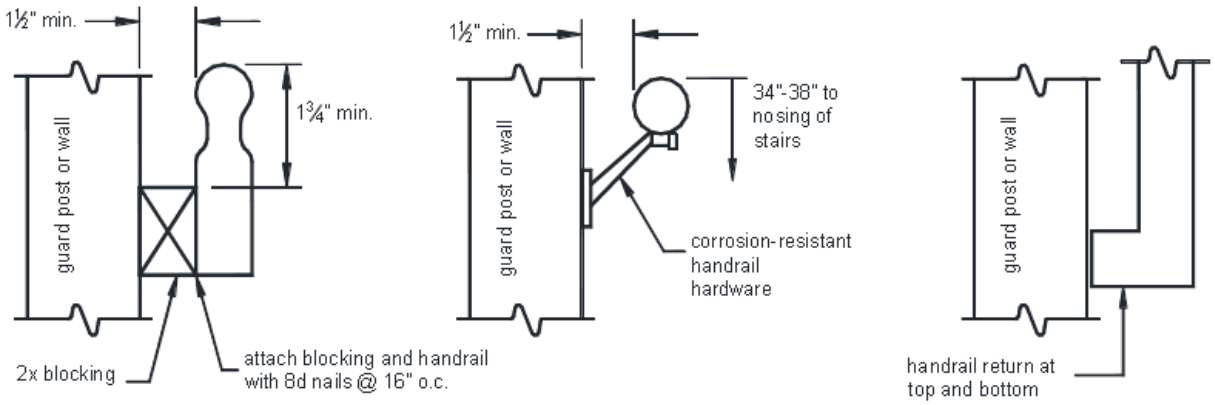

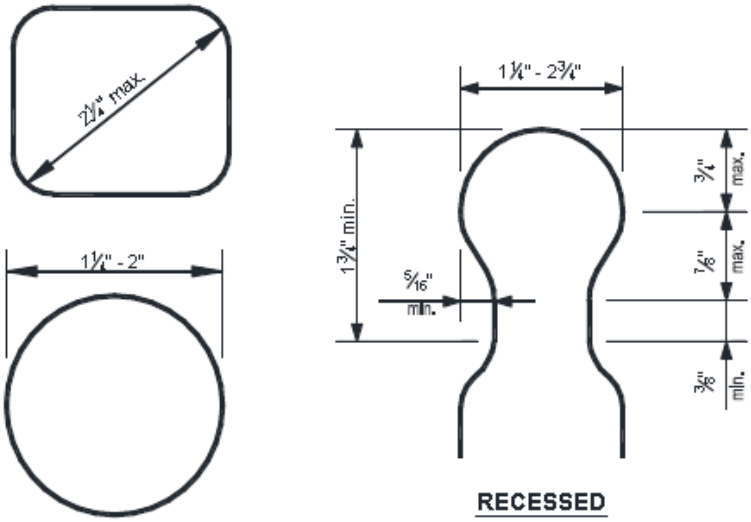
2¼" max.
1¼" - 2"
1¼" - 2¾"
1¾" min.
5/16" min.
¾" max.
⅞" max.
⅜" min.
RECESSED

IMPORTANT INFORMATION

Inspection Requests

- It shall be the duty of the holder of the building permit or their duly authorized agent to notify the building official when work is ready for inspection. It shall be the duty of the permit holder to provide access to and means for inspections of such work that are required by this code.

Required Inspections

- Pier/footing excavations before placing concrete [Photographs not accepted]
    - Helical piers require a certified report immediately after installation
- Rough framing [Includes ledger and flashing]
- Final inspection [Stairs and guards must all be completed]

Approval Required

- Work shall not be done beyond the point indicated in each successive inspection without first obtaining the approval of the building official. The building official, upon notification, shall make the requested inspections and shall either indicate the portion of the construction that is satisfactory as completed, or notify the permit holder or the permit holder's agent wherein the same fails to comply with this code. Any portions that do not comply shall be corrected and such portion shall not be covered or concealed until authorized by the building official.